EU

www.beham.com

BEHAM

目录
INDEX

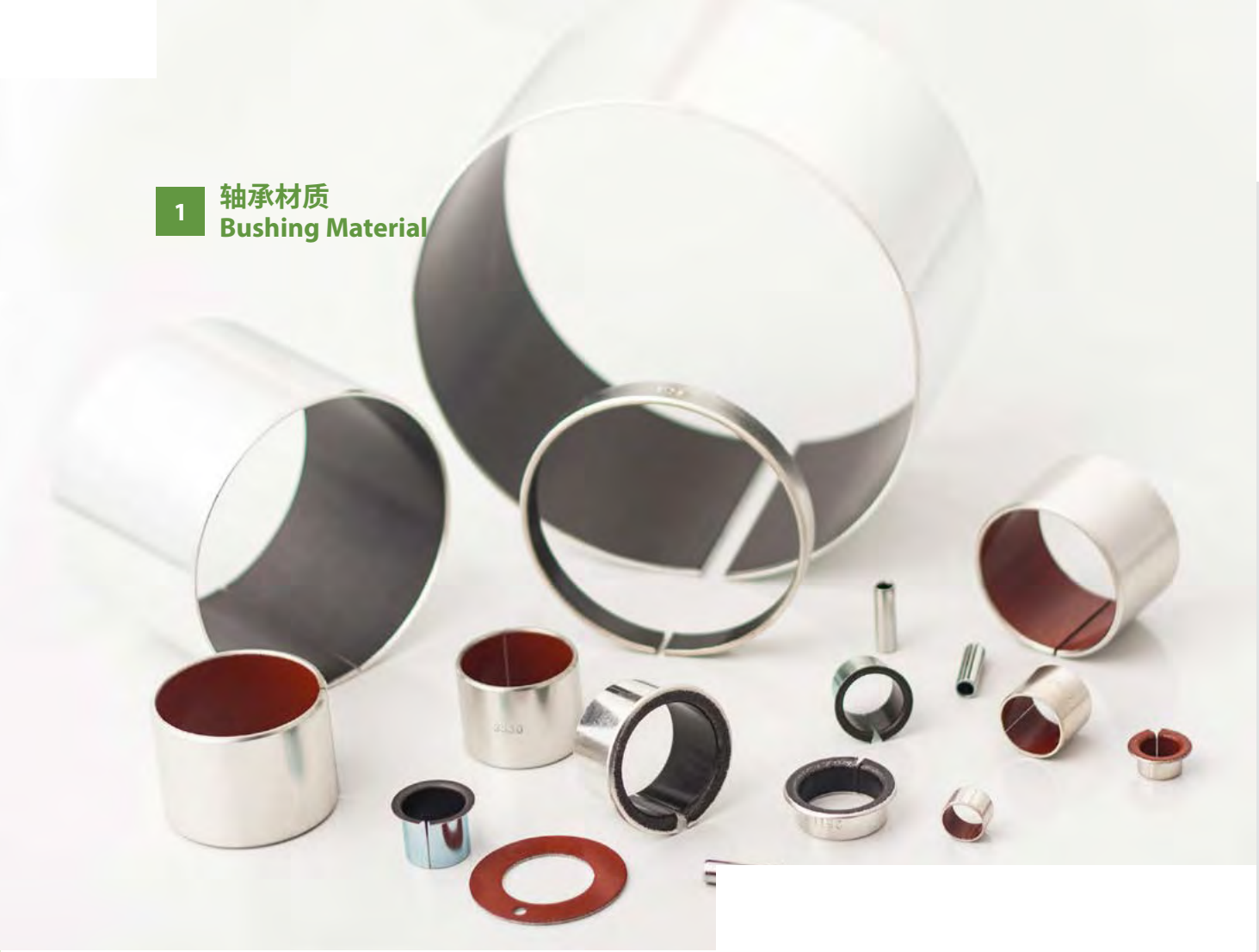

1 轴承材质
Bushing Material

1.1 EU 产品介绍
EU Brief Description

EU 是用碳钢基材、青铜粉、聚四氟乙烯、纤维等材料经过特殊工艺制造而成的自润滑产品，具有环保的特点。它不仅具有一定的化学性能，同时具有良好的物理性能和机械性能，可应用在各种机械的滑动、转动、摆动及直线往复运动部位，工作时具有自润滑、耐磨损、摩擦系数低、走合性能好、噪音低等特点。

EU tri-layer maintanence-free bushing have a base of lower carbon steel, onto which a porous bronze layer is sintered. PTFE mixtures are impregnated into the intersice of this bronze layer after rolling process completed. EU has good physical & mechanical properties, also has certainly chemical properties. It is suitable for rotary, oscillating movement with performance of self-lub. Anti-wear, lower firction, lower noise.

1.2 EU 产品结构及工作机理
EU Structure

1 自润滑层，厚度为0.01~0.03mm，是聚四氟乙烯与纤维等减摩材料的混合物，通过制板工艺进入铜粉组织内部和覆在铜层表面。作为工作面，工作中形成转移膜，可以显著地降低摩擦系数及很好的保护对磨部件。

2 青铜粉层，作为自润滑层的附着体。

3 低碳钢层，工作中起到良好的承载和散热作用。

4 镀铜/锡层，具有良好的耐腐蚀性。

1 Self-lub. Layer PTFE Mixture 0.01-0.03mm.
After rolling process completed, PTFE mixtures are filled in intersice of bronze layer. Under normal operation, Part of PTFE mixture on top layer will be removed and transferred on the mating surface, forms a physically lubricating film, which will reduced the firction coe. and protect the mating shaft.

2 Porous Bronze layer;
The layer provides bonded strength of Self-Lub. Layer.

3 Steel Backing
The layer provides load & thermal conductivity

4 Copper / Tin layer

1.3 EU 产品技术参数
EU Material Characteristics

产品技术参数	Material Characteristics		
最大承载 P	**Max. Load Capacity**		
静载	Static Load	N/mm^2	250
动载	Dynamic Load	N/mm^2	140
最高线速度 V	**Max. Speed**		
干式运行	Dry Running	m/s	2.0
液体运行	Hydrodynamic Operation	m/s	>2
最高PV值(干摩擦)	**Max. PV Value**		
短期	Short-Term Operation	$N/mm^2 \cdot m/s$	3.6
连续	Continuous Operation	$N/mm^2 \cdot m/s$	1.8
摩擦系数	**Coefficient of Friction**	μ	0.03~0.25
使用温度	**Operating Temperature Range**	°C	-195~280
导热系数	**Thermal Conductivity**	w/m · k	40
热膨胀系数	**Coefficient of Thermal Expansion**	λ_{ST}	$11 \cdot 10K^{-1}$

1.4 EU 产品类别
EU Material Category

三层复合轴套
Tri-layer Bushing Series

EX 低维护系列轴套
EX Tri-layer Low Maintenance Free Bushing Series

EU 免维护系列轴套
EU Tri-layer Maintenan ce Free Bushing Series

EU 304/316
不锈钢基板免维护轴套
EU 304/316
Tri-layer Maintenance Free Bushing Stainless Steel Backing

EU 钢基免维护轴套
EU Tri-layer Maintenance Free Bushing Steel Backing

EU B 铜基免维护轴套
EU B Tri-layer Maintenance Free Bushing Copper Backing

EU H 液压用轴套
EU H Hydraulic Application

EU S 减震器用轴套
EU S Shock Absorber Application

EU G 齿轮泵用轴套
EU G Gear pump Application

1.5 EU 产品耐化学性能表
EU Material Chemical Characteristic

轴承型号 Type	淡水 Water	海水 Sea Water	空气 Air	碱溶液 Alkaline Solutions	中性溶剂 Neutral Solutions	油润滑 Fuels & Lubricants	强酸 Strong Acid	弱酸 Weak Acid
EU	□	▲	□	□	★	★	▲	▲
EU G	□	▲	□	□	★	★	▲	▲
EU H	□	▲	□	□	★	★	▲	▲
EU S	□	▲	□	□	★	★	▲	▲
EU B	□	□	□	□	★	★	□	□
EU 304/316	□	□	□	□	★	★	□	□
EX	□	▲	□	□	★	★	▲	▲

★ 良好 Good　□ 一般 Common　▲ 差 Poor

2 轴承选型、接触面形式、装配
Bushing Design, Mating Surface, Install

2.1 轴承选型
Bushing Design

与轴承寿命有关的六个因素:

(1) 载荷 P [N/mm^2] Load

载荷越大，轴承使用寿命越短；载荷波动越大，对轴承寿命的影响也越大，轴承寿命越短；无论在任何情况下，最大载荷不可超过理论最大允许负载值。载荷大小等于实际工作载荷除以轴承的投影面积，公式为P=F/(D*B)。

(2) 速度 V [m/s]与PV 值

Velocity V & PV Value

轴承的工作寿命取决于PV值的大小，即实际负载 P [N/mm^2] 与滑动速度 V [m/s]乘积，PV值越小，轴承寿命越长。

(3) 温度 T [°C]

Tempture

轴承的寿命也取决于轴承使用时的温度，因此在设计选型时应尽量考虑相关部件的散热特性。

(4) 对磨部件的表面粗糙度

与轴承对磨的部件接触面粗糙度应在Ra0.2~Ra0.8之间，轴承在装配和使用的过程中不可有锐利的介质损坏轴承的工作表面。

(5) 对磨部件表面材料，对磨部件表面粗糙度是影响轴套使用寿命的一个因素，一般情况下某表面要求达到≤0.4μm ka。

(6) 其他因素如轴承座的设计、润滑条件等

Factors of bushing service life:

(1) Operation load is an important factor for bushing service life, and steady load is beneficialful for it. Generally, the specific load determined by the type of loading, and should not exceed theoretic value. Specifica load obtained from operation load divided by the projected are a of bushing.

(2) Bushing service life determined by PV Valve, PV= PxV. PV value is smaller, service life of bushing is longer.

(3) Environment tempture and Thermal

Generated from the different movements like Oscillating, rotary & reciprocating will influence the bushing service life. The resions has higher thermal expansion rate with poor thermal conductivity. It is necessary to control the bushing size and clearance.

(4) The roughness of mating surface should be Ra 0.2-Ra 0.8. During the process of installing, the sharp or burrs etc forbidden to damge the mating surface.

(5) Material of Mating Surface will effected service life of bushing the mating surface finish should ≤0.4μm ka.

(6) Other Factors like Design of housing, Lubrication condition etc

2.2 PV值 PV Value

轴套 BUSHING		压力 PRESSURE, P P N/mm² {kgf/cm²}	速度 VELOCITY, V m/s {m/min}	PV值 PV Value N/mm²*m/s {kgf/cm²*m/min}
直套 Sleeve Bushing 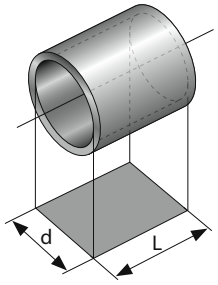	1.径向单向旋转 Rotating motion in single direction of radial journal 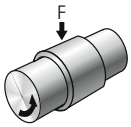	$\frac{F}{dL}$ $\left\{\frac{10^2F}{dL}\right\}$	$\frac{\pi dn}{10^3}$ $\left\{\frac{\pi dn}{10^3}\right\}$	$\frac{\pi Fn}{10^3L}$ $\left\{\frac{\pi Fn}{10L}\right\}$
	2.摇摆运动 Oscillating motion 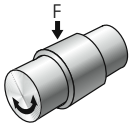	$\frac{F}{dL}$ $\left\{\frac{10^2F}{dL}\right\}$	$\frac{dC\theta}{10^3}$ $\left\{\frac{\pi dc\theta}{180\times10^3}\right\}$	$\frac{FC\theta}{10^3L}$ $\left\{\frac{\pi Fc\theta}{180\times10^2L}\right\}$
	3.往复运动 Reciprocating motion 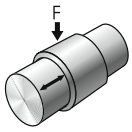	$\frac{F}{dL}$ $\left\{\frac{10^2F}{dL}\right\}$	$\frac{2cS}{10^3}$ $\left\{\frac{2cS}{10^3}\right\}$	$\frac{2FcS}{10^3dL}$ $\left\{\frac{FcS}{5dL}\right\}$
止推垫片 Thrust Washer 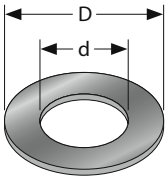	1.旋转 Rotating motion 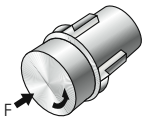	$\frac{4F}{\pi(D^2-d^2)}$ $\left\{\frac{400F}{\pi(D^2-d^2)}\right\}$	$\frac{\pi Dn}{10^3}$ $\left\{\frac{\pi Dn}{10^3}\right\}$	$\frac{4FDn}{10^3(D^2-d^2)}$ $\left\{\frac{4FDn}{10(D^2-d^2)}\right\}$
	2.摇摆运动 Oscillating motion 	$\frac{4F}{\pi(D^2-d^2)}$ $\left\{\frac{400F}{\pi(D^2-d^2)}\right\}$	$\frac{DC\theta}{10^3}$ $\left\{\frac{\pi Dc\theta}{180\times10^3}\right\}$	$\frac{4FDC\theta}{10^3\pi(D^2-d^2)}$ $\left\{\frac{4FDc\theta}{180\times10(D^2-d^2)}\right\}$
翻边轴套 Flange Bushing 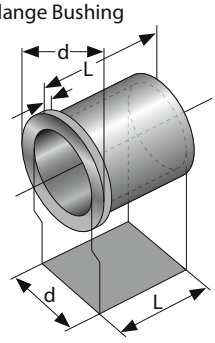	1.直套 Sleeve Bushing	翻边直套承载计算用上述直套承载计算公式，但 L=l+t。 Use above formulas for sleeve bushing (L=l+t)	翻边直套轴速度计算用上述直套速度计算公式。 Use above formulas for sleeve bushing	翻边直套轴PV值计算用上述直套PV值计算公式。 Use above formulas for sleeve bushing
	2.法兰面 Flange surface	翻边法兰面承载计算按上述垫片承载计算公式。 Use above formulas for thrust washer	翻边法兰面速度计算按上述垫片计算公式。 Use above formulas for thrust washer	翻边法兰面PV值计算按上述垫片PV值计算公式。 Use above formulas for thrust washer
滑块 Slide Plate 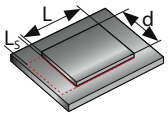	1.往复运动 Reciprocating motion 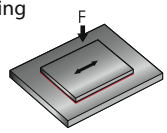	$\frac{F}{BL}$ $\left\{\frac{10^2F}{WL}\right\}$	$\frac{2cS}{10^3}$ $\left\{\frac{2cS}{10^3}\right\}$	$\frac{2FcS}{10^3BL}$ $\left\{\frac{FcS}{5WL}\right\}$

F : 承载 load ····· N {kgf}
N : 转速 Rotate speed ····· S-1{rpm}
c : 往复圆周速度或摇摆 Cylindrical velocity of reciprocating or oscillating motion ····· S-1{cpm}
S : 往复运动距离 Reciprocating distance ····· m {mm}
θ : 摇摆角度 Oscillating angle ····· rad { }
d : 轴套内径 Bushing ID ····· mm {mm}
D : 轴套外径 Bushing OD ····· mm {mm}
L : 轴套长度 Bushing length ····· mm {mm}
W : 板材或滑动宽度 Stirp/Slide width ····· mm {mm}

3 轴套装配
Bushing Installation

3.1 轴套接触面设计
Bushing Arrangememt Design

错误的装配形式会破坏或缩短轴承的使用寿命，下面列出了相关的装配形式，请在设计时参考：

Wrong assemble will broken or reduced useful life the following assemble should be referred when design:

	错误 Error	正确 Correct
翻边套与轴肩接触形式 Flang Bushing & Shaft	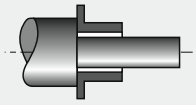	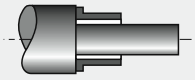
垫片与轴肩接触形式 Thrust Washer & Shaft	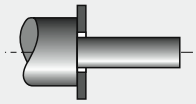	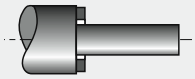
轴套与轴的油槽形式 Bushing & Shaff oil grooves	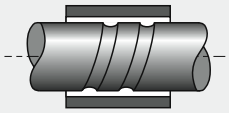	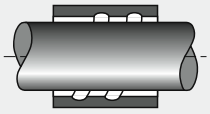
润滑油槽及油孔的形式 Oil grooves & Oil hole	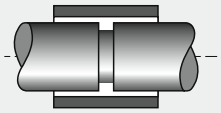	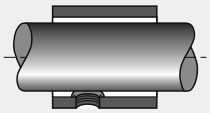
轴肩与轴套的接触面形式 Bushing & Shaft	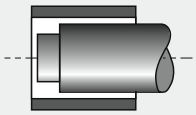	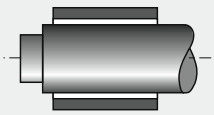
轴槽与轴套的接触面形式 Shaft groove & Bushing	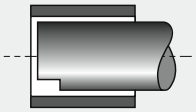	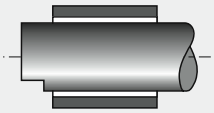
轴与轴套的同心度装配要求 Concentricity between Shaft & Bushing	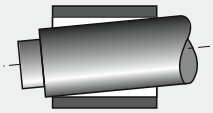	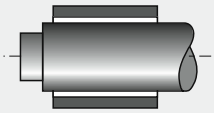

3.2 轴套座孔设计 Housing Design

直套装配设计

为了更易于装配，轴承的座孔均应有一个倒角，如表。

Bushing

It's necessary there should have a chamfer on housing bore, it make bushing easier to be pressed into housing.

座孔 Housing bore diameter d_G	倒角 Chamfer with f_G
$d_G \leq 30$	0.8±0.3
$30 < d_G \leq 80$	1.2±0.4
$80 < d_G \leq 180$	1.8±0.8
$180 < d_G$	2.5±1.0

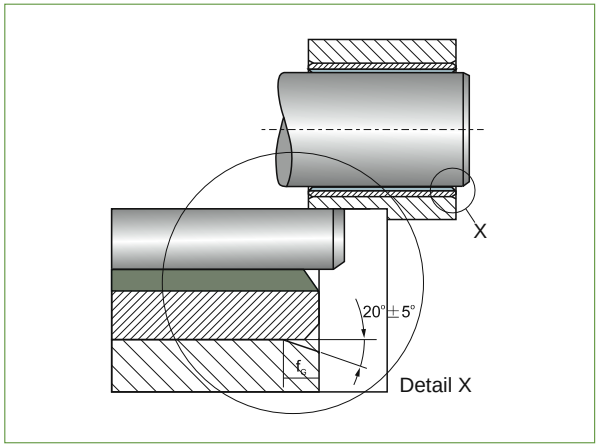

翻边套装配设计
Flange Bushing

座孔 Housing bore diameter d_G	倒角 Chamfer with f_G
$d_G \leq 10$	1.2±0.2
$180 < d_G$	1.7±0.2

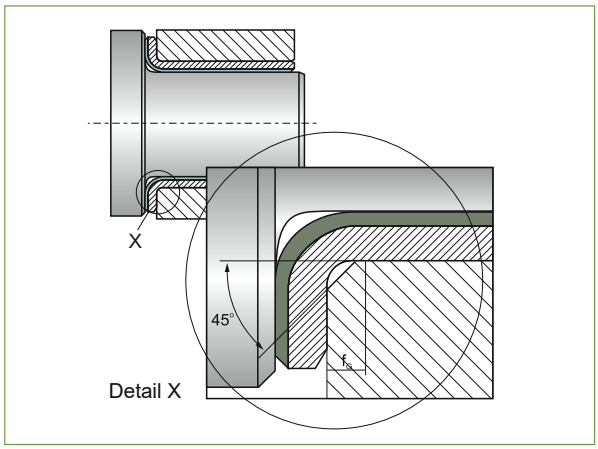

同轴度
Concentricity

精确的同轴度对所有的轴承装配都是一个重要的考虑因素。轴承在一个轴套（或两个）长度内的不同轴度或在止推垫圈直径值内的不同轴度不应该超过0.020mm，如图所示

Concentricity is an important factor for bushing application.

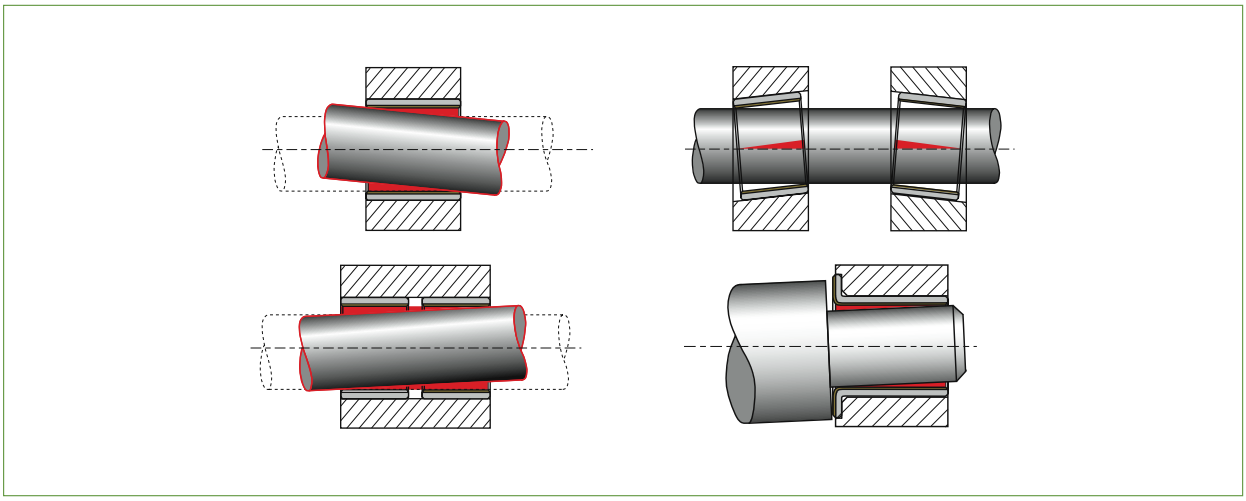

3.3 轴套压装
Bushing Installation

直套压装
Fitting of Cylindrical Bushing

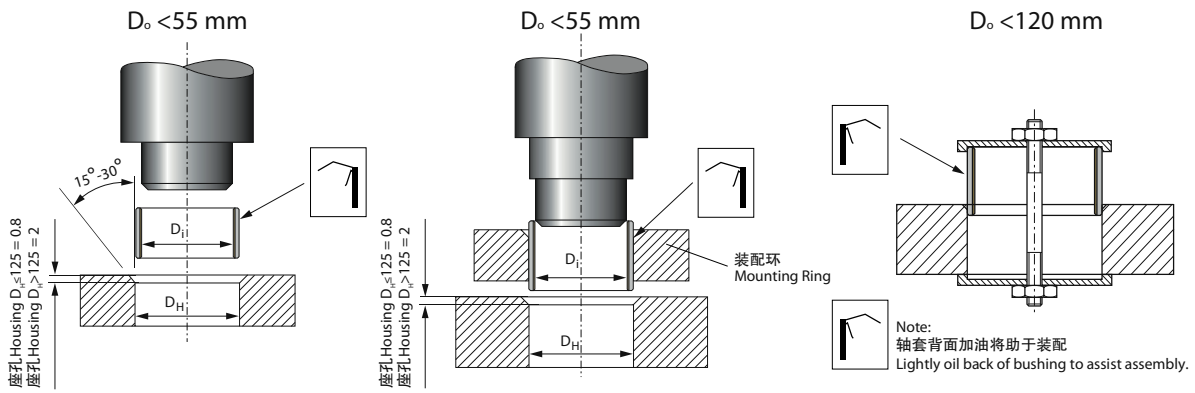

翻边轴套压装
Fitting of Flanged Bushing

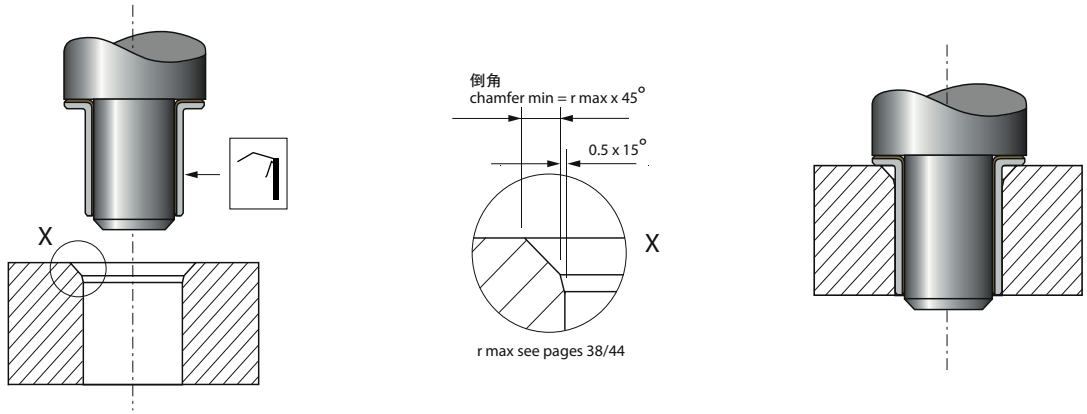

压入力
Insertion Forces

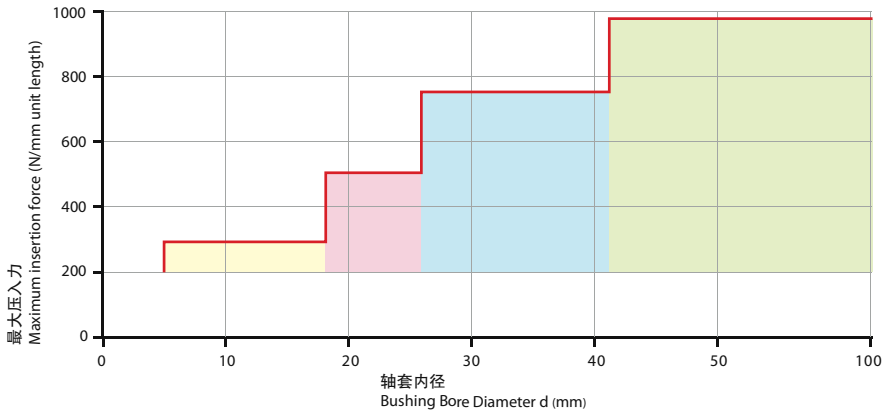

3.4 止推垫片和滑块装配
Thrust washers & Plate Installation

装配止推垫片和滑块时座孔肩有凹穴， 定位销则应用于防止产品旋转。
Housing should have hollow dents for installing thrust washer and sliding plates. Dowel pins used for prevent turning.

定位销应用（止推垫片）
Dowel Pin Application (Thrust Washer)

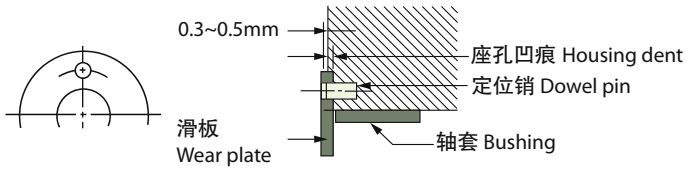

滑块镶嵌装配（滑板）
Inlaid Installation (Plate)

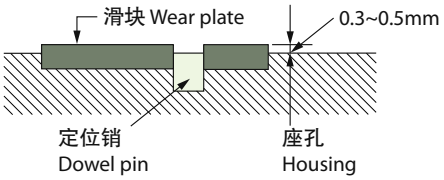

平头螺丝应用
Flat Head Screw Application

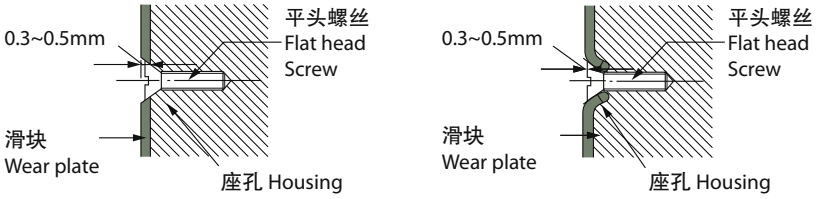

1 安装后，垫圈的内径不能碰到旋转轴。
After install, ID of washer can not contact shaft.

2 垫圈的钢背与轴承座相接触。
Backing of washer contact housing.

3 定位销应比止推垫圈表面下凹0.25～0.50mm。
Dowel pin should 0.25 ~ 0.50mm lower than surface of thrust washer

4 平头螺丝应比止推垫圈表面下沉0.25～0.50mm。
Flat head screw should 0.25 ~ 0.50mm lower than surface of thrust washer.

4 产品应用 Application

4.1 EU 产品应用 EU Application

由于材料的特性和性能的结合，EU产品比一般的自润轴承得到了更广泛的应用和推广。薄壁结构，体积小，重量轻，使EU轴套方便使用。基于耐磨层PTFE混合物的材料特性，EU产品适用于难维护的无法加油或难加油，无油润滑和少油润滑的场合。在使用过程中，PTFE混合物形成转移膜保护对磨轴从而避免咬轴现象。PTFE混合物具有出色的耐磨性能和低磨擦系数，还有适量的弹塑性，能将应力分布在较宽的接触面上，从而提高EU产品的承载能力(见)，所以EU产品适用于旋转，摇摆，轴向滑动等场合。

Base on the combinations of properties & performance capabilities; EU has greater application range than other self-lubricating bearings. Thin-wall compact, lightweight, EU bearings are economic & convenient to use. EU's PTFE-based bushing surface permits smooth, low coefficient of friction, low wear rate operation with no lubricant, no maintenance & dry running. During operation, the transfer film created will protect the mating shaft surface. EU bearings has great capacity of load & wild range of operation temperatures from-190 to 280, can be suitable for rotary, oscillating and axial sliding motion.

具体的应用。
Detailed application.
下列是有关EU轴承的部分具体应用
The following list covers some of the many types of EU bearing applications.

汽车工业
Automotive

在这个行业的典型的应用包括:
油门、制动、离合器踏板、反光镜调节机构、雨刮器、玻璃窗提升机构、天窗机构、操纵杆、车门铰链车门锁、安全带张紧机构、座椅调节机构、减震器、引擎减震、化油器、行李箱、引擎盖铰链、横直拉杆及球头、节流阀、驾驶杆、转向装置、弹黄钢板等。

Typical applicaiton in this area include:
accelerator linkages, brake, clutch foot pedal, reflector control, windscreen wipers, windscreen lift system, roof window system, gear level, door hinges, door lock, seat belt system, seating system, shock absorbers, engin absorbers, carburetor, trunk & bonnet hinges, suspension ball joint, throttle valves, steering columns, steering rods, king-pin assemblies etc.

农业机械和食品机械
Agricultural Machinery/Equipments

拖拉机、联合收割机、(干草、稻草等的）打包机；压捆机、肉类加工设备、土豆收获机、喷雾机、谷物干燥机、栽{种]植设备、酿造设备等。

Tractors, combine harvesters, balers, meat processing equipment, potato harvesters, crop sprayers, grain dryers, planting apparatus, brewing equipment, etc.

4.1 EU 产品应用
EU Application

工程机械、运输机械
Construction Equipments

挖掘机、液压升降机、混凝土搅拌机、叉式提升搬运车、液压缸、传动带张紧装置、起重机、砂浆车、托盘叉式起重车、气力升降机、推土机、自动扶梯、自动行人道、重型挂车、液体灌输设备、侧向装卸机等。

Excavator hydraulic lifts, concrete mixers, fork lift trucks, hydraulic cylinders, tensioning pulleys, crane, mortar vehicles, pallet fork lift trucks, pneumatic lifts, graders, escalators, moving walkways, heavy-duty trailers, Liquid filling equipment, side loader roller assemblies, power take-off units etc.

家用电器、商业电器、医院设备
Home Appliances, Hospital Equipments

空调、吸尘器、洗碗机、缝纫机、洗衣机、冰箱、复印机、打印机、扫描仪、邮件处理系统、信件分类装置、牙科设备、X射线设备、手术台等。

Air conditioners, cleaners, dish-washing machine, sewing machines, clothes washing machines, refrigerator, copy machines, automatic print machines, scanner, mail processing machinery, mail sorters, dental equipment, x-ray equipment, operating table etc.

液压行业
Hydraulics

齿轮泵、水泵、活塞泵、球阀、蝶阀、混合阀、控制阀、往复式空压机、液压制动器、离心式压缩机、液压油缸等。

Gear pump, water pump, piston pump, ball valves, butterfly valves, mixing valves, pilot valve, reciprocating air compressors, hydraulic actuators, centrifugal compressors, hydraulic cylinder etc.

其它应用
Other Applications

自行车、摩托车、工具、蒸纱机、往复锯、割绒机、 纺织机、编织机、纽扣机、包装系统、钉装机械设备、玻璃制造设备等。

Bike, motobicyle, hand tools, yarn & wool machinery, reciprocating saws, cutting machines, spinning machines, knitting machines, button machines, packaging system, bookbinding equipment, glass manufacturing equipments etc.


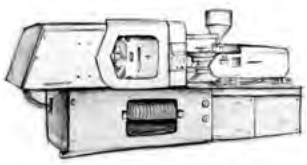
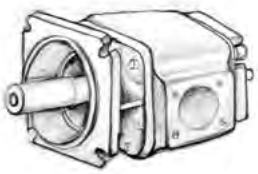


5 规格和公差
Specification & Tolerance

5.1 EU 直套规格及公差
EU Sleeve Bushing Specification & Tolerance

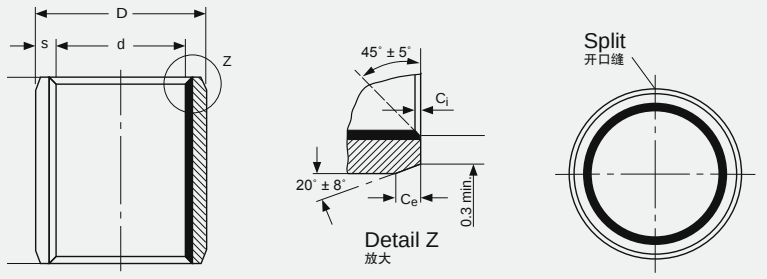

尺寸：毫米
All dimensions in mm

尺寸和公差参照ISO 3547
Dimensions and Tolerances according to ISO 3547

内外倒角尺寸表
Inside & Outide Chamfers

壁厚 Wall thickness S	内倒角 Inside Chafmer C_i	外倒角 Outside Chamfer C_e
0.75	0.25±0.15	0.50±0.30
1.00	0.30±0.20	0.60±0.40
1.50	0.40±0.30	0.60±0.40
2.00	0.40±0.30	1.20±0.40
2.50	0.60±0.40	1.80±0.60

直套型号标注方式
Bushing Symbol

直套型号标注方式 Bushes Symbol	EU - □	××	××
直套型号 Bushing Type			
直套内径 Bushing I.D.			
直套高度 Bushing Length			

内径 Internal Diameter (I.D.)			外径 External Diameter (O.D.)			高度 Length	壁厚 Wall Thickness	型号 Part No
内径 d	装配轴径 Shaft-Φd_S	装配后内孔尺寸 Φd_i	外径 D	装配座孔 Housing-ΦD_H	理论外径公差 O.D. ΦD_t	ID<80 L±0.25 ID>80 L±0.50	S	
4	4.000 3.992	4.048 4.000	5.5	5.508 5.500	+0.055 +0.025	4	0.750 0.730	EU 0404
						6		EU 0406
						10		EU 0410
5	4.990 4.978	5.055 4.990	7	7.015 7.000	+0.055 +0.025	5	1.005 0.980	EU 0505
						8		EU 0508
						10		EU 0510
6	5.990 5.978	6.055 5.990	8	8.015 8.000	+0.055 +0.025	4	1.005 0.980	EU 0604
						6		EU 0606
						8		EU 0608
						10		EU 0610
7	6.987 6.972	7.055 6.990	9	9.015 9.000	+0.055 +0.025	5	1.005 0.980	EU 0705
						10		EU 0710
8	7.987 7.972	8.055 7.990	10	10.015 10.000	+0.055 +0.025	6	1.005 0.980	EU 0806
						8		EU 0808
						10		EU 0810
						12		EU 0812

内径 Internal Diameter(I.D.)			外径 External Diameter(O.D.)			高度 Length	壁厚 Wall Thickness	型号 Part No
内径 d	装配轴径 Shaft-Φd_S	装配后内孔尺寸 Φd_i	外径 D	装配座孔 Housing-ΦD_H	理论外径公差 O.D. ΦD_t	ID<80 L±0.25 ID>80 L±0.50	S	
10	9.987 9.972	10.058 9.990	12	12.018 12.000	+0.065 +0.030	8	1.005 0.980	EU 1008
						10		EU 1010
						12		EU 1012
						15		EU 1015
						20		EU 1020
12	11.984 11.966	12.058 11.990	14	14.018 14.000	+0.065 +0.030	8	1.005 0.980	EU 1208
						10		EU 1210
						12		EU 1212
						15		EU 1215
						20		EU 1220
						25		EU 1225
13	12.984 12.966	13.058 12.990	15	15.018 15.000	+0.065 +0.030	10	1.005 0.980	EU 1310
						15		EU 1315
						20		EU 1320
14	13.984 13.966	14.058 13.990	16	16.018 16.000	+0.065 +0.030	5	1.005 0.980	EU 1405
						10		EU 1410
						12		EU 1412
						15		EU 1415
						20		EU 1420
						25		EU 1425
15	14.984 14.966	15.058 14.990	17	17.018 17.000	+0.065 +0.030	10	1.005 0.980	EU 1510
						12		EU 1512
						15		EU 1515
						20		EU 1520
						25		EU 1525
16	15.984 15.966	16.058 15.990	18	18.018 18.000	+0.065 +0.030	10	1.005 0.980	EU 1610
						12		EU 1612
						15		EU 1615
						20		EU 1620
						25		EU 1625
18	17.984 17.966	18.061 17.990	20	20.021 20.000	+0.075 +0.035	10	1.005 0.980	EU 1810
						15		EU 1815
						20		EU 1820
						25		EU 1825

内径 Internal Diameter(I.D.)			外径 External Diameter(O.D.)			高度 Length	壁厚 Wall Thickness	型号 Part No
内径 d	装配轴径 Shaft-Φd_S	装配后内孔尺寸 Φd_i	外径 D	装配座孔 Housing-ΦD_H	理论外径公差 O.D. ΦD_t	ID<80 L±0.25 ID>80 L±0.50	S	
20	19.980 19.959	20.071 19.990	23	23.021 23.000	+0.075 +0.035	10	1.505 1.475	EU 2010
						15		EU 2015
						20		EU 2020
						25		EU 2025
						30		EU 2030
22	21.980 21.959	22.071 21.990	25	25.021 25.000	+0.075 +0.035	15	1.505 1.475	EU 2215
						20		EU 2220
						25		EU 2225
						30		EU 2230
24	23.980 23.959	24.071 23.990	27	27.021 27.000	+0.075 +0.035	15	1.505 1.475	EU 2415
						20		EU 2420
						25		EU 2425
						30		EU 2430
25	24.980 24.959	25.071 24.990	28	28.021 28.000	+0.075 +0.035	15	1.505 1.475	EU 2515
						20		EU 2520
						25		EU 2525
						30		EU 2530
						40		EU 2540
						50		EU 2550
28	27.980 27.959	28.085 27.990	32	32.025 32.000	+0.085 +0.045	15	2.005 1.970	EU 2815
						20		EU 2820
						25		EU 2825
						30		EU 2830
30	29.980 29.959	30.085 29.990	34	34.025 34.000	+0.085 +0.045	10	2.005 1.970	EU 3010
						15		EU 3015
						20		EU 3020
						25		EU 3025
						30		EU 3030
						40		EU 3040
32	31.975 31.950	32.085 31.990	36	36.025 36.000	+0.085 +0.045	20	2.005 1.970	EU 3220
						25		EU 3225
						30		EU 3230
						35		EU 3235
						40		EU 3240

内径 Internal Diameter(I.D.)			外径 External Diameter(O.D.)			高度 Length	壁厚 Wall Thickness	型号 Part No
内径 d	装配轴径 Shaft-Φd_S	装配后内孔尺寸 Φd_i	外径 D	装配座孔 Housing-ΦD_H	理论外径公差 O.D. ΦD_t	ID<80 L±0.25 ID>80 L±0.50	S	
35	34.975 34.950	35.085 34.990	39	39.025 39.000	+0.085 +0.045	20	2.005 1.970	EU 3520
						30		EU 3530
						35		EU 3535
						40		EU 3540
						50		EU 3550
40	39.975 39.950	40.085 39.990	44	44.025 44.000	+0.085 +0.045	12	2.005 1.970	EU 4012
						20		EU 4020
						25		EU 4025
						30		EU 4030
						40		EU 4040
						50		EU 4050
45	44.975 44.950	45.105 44.990	50	50.025 50.000	+0.085 +0.045	20	2.505 2.460	EU 4520
						30		EU 4530
						40		EU 4540
						45		EU 4545
						50		EU 4550
50	49.975 49.950	50.110 49.990	55	55.030 55.000	+0.100 +0.055	20	2.505 2.460	EU 5020
						30		EU 5030
						40		EU 5040
						50		EU 5050
						60		EU 5060
55	54.970 54.940	55.110 54.990	60	60.030 60.000	+0.100 +0.055	20	2.505 2.460	EU 5520
						25		EU 5525
						30		EU 5530
						40		EU 5540
						50		EU 5550
						55		EU 5555
						60		EU 5560
60	59.970 59.940	60.110 59.990	65	65.030 65.000	+0.100 +0.055	20	2.505 2.460	EU 6020
						30		EU 6030
						40		EU 6040
						50		EU 6050
						60		EU 6060
						70		EU 6070

内径 Internal Diameter(I.D.)			外径 External Diameter(O.D.)			高度 Length	壁厚 Wall Thickness	型号 Part No
内径 d	装配轴径 Shaft-Φd_S	装配后内孔尺寸 Φd_i	外径 D	装配座孔 Housing-ΦD_H	理论外径公差 O.D. ΦD_t	ID<80 L±0.25 ID>80 L±0.50	S	
65	64.970 64.940	65.110 64.990	70	70.030 70.000	+0.100 +0.055	30	2.505 2.460	EU 6530
						50		EU 6550
						70		EU 6570
70	69.970 69.940	70.110 69.990	75	75.030 75.000	+0.100 +0.055	40	2.505 2.460	EU 7040
						50		EU 7050
						70		EU 7070
75	74.970 74.940	75.110 74.990	80	80.030 80.000	+0.100 +0.055	60	2.505 2.460	EU 7560
						80		EU 7580
80	80.000 79.946	80.155 80.020	85	85.035 85.000	+0.120 +0.070	60	2.490 2.440	EU 8060
						80		EU 8080
						100		EU 80100
85	85.000 84.946	85.155 85.020	90	90.035 90.000	+0.120 +0.070	60	2.490 2.440	EU 8560
						80		EU 8580
						100		EU 85100
90	90.000 89.946	90.155 90.020	95	95.035 95.000	+0.120 +0.070	60	2.490 2.440	EU 9060
						80		EU 9080
						100		EU 90100
95	95.000 94.946	95.155 95.020	100	100.035 100.000	+0.120 +0.070	60	2.490 2.440	EU 9560
						80		EU 9580
						100		EU 95100
100	100.000 99.946	100.155 100.020	105	105.035 105.000	+0.120 +0.070	50	2.490 2.440	EU 10050
						60		EU 10060
						80		EU 10080
						100		EU 100100
105	105.000 104.946	105.155 105.020	110	110.035 110.000	+0.120 +0.070	60	2.490 2.440	EU 10560
						80		EU 10580
						100		EU 105100
110	110.000 109.946	110.155 110.020	115	115.035 115.000	+0.120 +0.070	60	2.490 2.440	EU 11060
						80		EU 11080
						100		EU 110100
115	115.000 114.946	115.155 115.020	120	120.035 120.000	+0.120 +0.070	60	2.490 2.440	EU 11560
						70		EU 11570
120	120.000 119.946	120.210 120.070	125	125.040 125.000	+0.170 +0.100	50	2.465 2.415	EU 12050
						60		EU 12060
						100		EU 120100
125	125.000 124.937	125.210 125.070	130	130.040 130.000	+0.170 +0.100	60	2.465 2.415	EU 12560
						80		EU 12580
						100		EU 125100
130	130.000 129.937	130.210 130.070	135	135.040 135.000	+0.170 +0.100	60	2.465 2.415	EU 13060
						80		EU 13080
						100		EU 130100

内径 Internal Diameter(I.D.)			外径 External Diameter(O.D.)			高度 Length	壁厚 Wall Thickness	型号 Part No
内径 d	装配轴径 Shaft-Φd_S	装配后内孔尺寸 Φd_i	外径 D	装配座孔 Housing-ΦD_H	理论外径公差 O.D. ΦD_t	ID<80 L±0.25 ID>80 L±0.50	S	
140	140.000 139.937	140.210 140.070	145	145.040 145.000	+0.170 +0.100	60	2.465 2.415	EU 14060
						80		EU 14080
						100		EU 140100
150	150.000 149.937	150.210 150.070	155	155.040 155.000	+0.170 +0.100	60	2.465 2.415	EU 15060
						80		EU 15080
						100		EU 150100
160	160.000 159.937	160.210 160.070	165	165.040 165.000	+0.170 +0.100	80	2.465 2.415	EU 16080
						100		EU 160100
180	180.000 179.937	180.216 180.070	185	185.046 185.000	+0.210 +0.130	80	2.465 2.415	EU 18080
						100		EU 180100
200	200.000 199.928	200.216 200.070	205	205.046 205.000	+0.210 +0.130	80	2.465 2.415	EU 20080
						100		EU 200100
210	210.000 209.928	210.216 210.070	215	215.046 215.000	+0.210 +0.130	80	2.465 2.415	EU 21080
						100		EU 210100
220	220.000 219.928	220.216 220.070	225	225.046 225.000	+0.210 +0.130	80	2.465 2.415	EU 22080
						100		EU 220100
250	250.000 249.928	250.222 250.070	255	255.052 255.000	+0.260 +0.170	80	2.465 2.415	EU 25080
						100		EU 250100
280	280.000 279.948	280.222 280.070	285	285.052 285.000	+0.260 +0.170	80	2.465 2.415	EU 28080
						100		EU 280100
300	300.000 299.919	300.222 300.070	305	305.052 305.000	+0.260 +0.170	80	2.465 2.415	EU 30080
						100		EU 300100

5.2 EU 翻边轴套规格及公差
EU Flange Bushing Specification & Tolerance

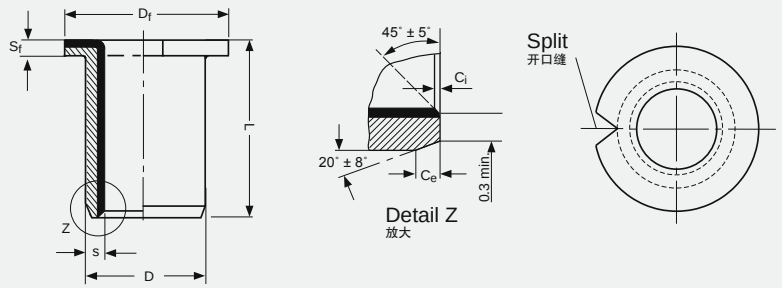

尺寸：毫米
All dimensions in mm

尺寸和公差参照ISO 3547
Dimensions and Tolerances according to ISO 3547

内外倒角尺寸表
Inside & Outide Chamfers

壁厚 Wall thickness S	内倒角 Inside Chafmer C_i	外倒角 Outside Chamfer C_e
0.75	0.25±0.15	0.50±0.30
1.00	0.30±0.20	0.60±0.40
1.50	0.40±0.30	0.60±0.40
2.00	0.40±0.30	1.20±0.40
2.50	0.60±0.40	1.80±0.60

翻边套型号标注方式
Flange Bushing Symbol

翻边套型号标注方式 Flange Bushing Symbol	EU - □	F	××	××
轴承型号 Flange Bushing Type				
翻边套 Flange				
翻边套内径 Flange Bushing Inner Diameter				
翻边套高度 Flange Bushing Length				

内径 Internal Diameter			外径 External Diameter			法兰厚度 Flang Wall s_f	法兰外径 Flang Φ D_f	高度 Length	壁厚 Wall Thickness	型号 Part No
内径 d	装配轴径 Shaft Φd_S	装配后内孔尺寸 Φd_i	外径 D	装配座孔 Housing ΦD_H	理论外径公差O.D. Φ D_t	max. min.	max. min.	L±0.25	S	
6	5.990 5.978	6.055 5.990	8	8.015 8.000	+0.055 +0.025	1.050 0.800	12.50 11.50	4	1.005 0.980	EU F06040
								8		EU F06080
8	7.987 7.972	8.055 7.990	10	10.015 10.000	+0.055 +0.025	1.050 0.800	15.50 14.50	5.5	1.005 0.980	EU F08055
								7.5		EU F08075
								9.5		EU F08095
10	9.987 9.972	10.058 9.990	12	12.018 12.000	+0.055 +0.025	1.050 0.800	18.50 17.50	7	1.005 0.980	EU F10070
								9		EU F10090
								12		EU F10120
								17		EU F10170
12	11.984 11.966	12.058 11.990	14	14.018 14.000	+0.065 +0.030	1.050 0.800	20.50 19.50	7	1.005 0.980	EU F12070
								9		EU F12090
								12		EU F12120
								17		EU F12170

内径 Internal Diameter			外径 External Diameter			法兰厚度 Flang Wall s_f	法兰外径 Flang Φ D_f	高度 Length	壁厚 Wall Thickness	型号 Part No
内径 d	装配轴径 Shaft Φd_s	装配后内孔尺寸 Φd_i	外径 D	装配座孔 Housing ΦD_H	理论外径公差 O.D. Φ D_t	max. min.	max. min.	L±0.25	S	
14	13.984 13.966	14.058 13.990	16	16.018 16.000	+0.065 +0.030	1.050 0.800	22.50 21.50	12	1.005 0.980	**EU F14120**
								17		**EU F14170**
15	14.984 14.966	15.058 14.990	17	17.018 17.000	+0.065 +0.030	1.050 0.800	23.50 22.50	9	1.005 0.980	**EU F15090**
								12		**EU F15120**
								17		**EU F15170**
16	15.984 15.966	16.058 15.990	18	18.018 18.000	+0.065 +0.030	1.050 0.800	24.50 23.50	12	1.005 0.980	**EU F16120**
								17		**EU F16170**
18	17.984 17.966	18.061 17.990	20	20.021 20.000	+0.075 +0.035	1.050 0.800	26.50 25.50	12	1.005 0.980	**EU F18120**
								17		**EU F18170**
								22		**EU F18220**
20	19.980 19.959	20.071 19.990	23	23.021 23.000	+0.075 +0.035	1.600 1.300	30.50 29.50	11.5	1.505 1.475	**EU F20115**
								16.5		**EU F20165**
								21.5		**EU F20215**
25	24.980 24.959	25.071 24.990	28	28.021 28.000	+0.075 +0.035	1.600 1.300	35.50 34.50	11.5	1.505 1.475	**EU F25115**
								16.5		**EU F25165**
								21.5		**EU F25215**
30	29.980 29.959	30.085 29.990	34	34.025 34.000	+0.075 +0.035	2.100 1.800	42.50 41.50	16	2.005 1.970	**EU F30160**
								26		**EU F30260**
35	34.975 34.950	35.085 34.990	39	39.025 39.000	+0.085 +0.045	2.100 1.800	47.50 46.50	16	2.005 1.970	**EU F35160**
								26		**EU F35260**
40	39.975 39.950	40.085 39.990	44	44.025 44.000	+0.085 +0.045	2.100 1.800	53.50 52.50	16	2.005 1.970	**EU F40160**
								26		**EU F40260**
45	44.975 44.950	45.105 44.990	50	50.025 50.000	+0.085 +0.045	2.600 2.300	58.50 57.50	16	2.505 2.460	**EU F45160**
								26		**EU F45260**

5.3 EU 垫片规格及公差
EU Thrust washer Specification & Tolerance

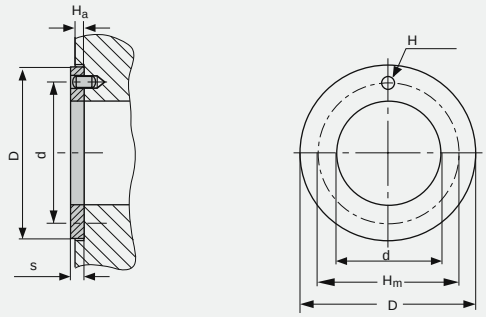

尺寸：毫米
All dimensions in mm

垫片型号标注方式
Washer Symbol

垫片型号标注方式 Washer Symbol	WC	××	EU - □
垫片 Washer			
垫片内径 Washer I. D .			
垫片型号 Washer Type			

内孔 Internal Diameter Φd		外径 External Diameter Φ D		壁厚 Thickness s	定位孔大小 Dowel Hole Φ H	定位孔中心距 Dowel Hole PCD ΦHm	装配深度 Recess Depth H_a	型号 Part No
min	max	min.	max.	max. min.	max. min.	Φ±0.125	max. min.	
10.00	10.25	19.75	20.00	1.50 1.45	无孔 No Hole	无孔 No Hole	1.20 0.80	**WC 10 EU**
12.00	12.25	23.75	24.00	1.50 1.45	1.90 1.60	18	1.20 0.80	**WC 12 EU**
14.00	14.25	25.75	26.00	1.50 1.45	2.40 2.10	20	1.20 0.80	**WC 14 EU**
16.00	16.25	29.75	30.00	1.50 1.45	2.40 2.10	22	1.20 0.80	**WC 16 EU**
18.00	18.25	31.75	32.00	1.50 1.45	2.40 2.10	25	1.20 0.80	**WC 18 EU**
20.00	20.25	35.75	36.00	1.50 1.45	3.40 3.10	28	1.20 0.80	**WC 20 EU**
22.00	22.25	37.75	38.00	1.50 1.45	3.40 3.10	30	1.20 0.80	**WC 22 EU**
24.00	24.25	41.75	42.00	1.50 1.45	3.40 3.10	33	1.20 0.80	**WC 24 EU**
26.00	26.25	43.75	44.00	1.50 1.45	3.40 3.10	35	1.20 0.80	**WC 26 EU**
28.00	28.25	47.75	48.00	1.50 1.45	4.40 4.10	38	1.20 0.80	**WC 28 EU**
32.00	32.25	53.75	54.00	1.50 1.45	4.40 4.10	43	1.20 0.80	**WC 32 EU**
38.00	38.25	61.75	62.00	1.50 1.45	4.40 4.10	50	1.20 0.80	**WC 38 EU**
42.00	42.25	65.75	66.00	1.50 1.45	4.40 4.10	54	1.20 0.80	**WC 42 EU**
48.00	48.25	73.75	74.00	2.00 1.95	4.40 4.10	61	1.70 1.30	**WC 48 EU**
52.00	52.25	77.75	78.00	2.00 1.95	4.40 4.10	65	1.70 1.30	**WC 52 EU**
62.00	62.25	89.75	90.00	2.00 1.95	4.40 4.10	76	1.70 1.30	**WC 62 EU**

5.4 EU 板材规格及公差
EU Strip Specification

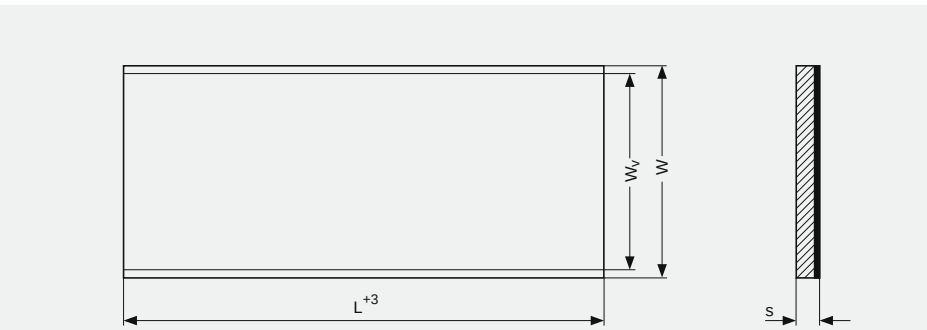

尺寸：毫米
All dimensions in mm

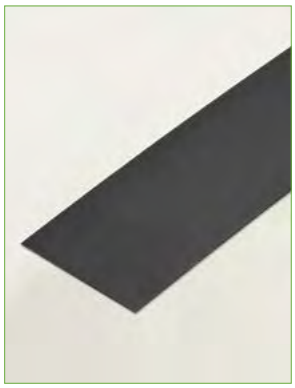

板材标注方式
Strip Symbol

板材标注方式 Strip Symbol	S	××	××	EU - □
板材 Strip				
板材厚度 Strip Wall Thickness				
板材宽度 Strip Width				
板材型号 Strip Type				

长度 Length L	宽度 Total Width W	有效宽度 Useable Width W_v	厚度 Thickness S-0.05	型号 Part No
500	160	150	0.75	**S 07150 EU**
500	225	215	1.00	**S 10215 EU**
500	254	245	1.50	**S 15245 EU**
500	254	245	2.00	**S 20245 EU**
500	254	245	2.50	**S 25245 EU**
500	254	245	3.00	**S 30245 EU**

5.5 EU 英制直套规格及公差
EU Inch Sleeve Bushing Specification & Tolerance

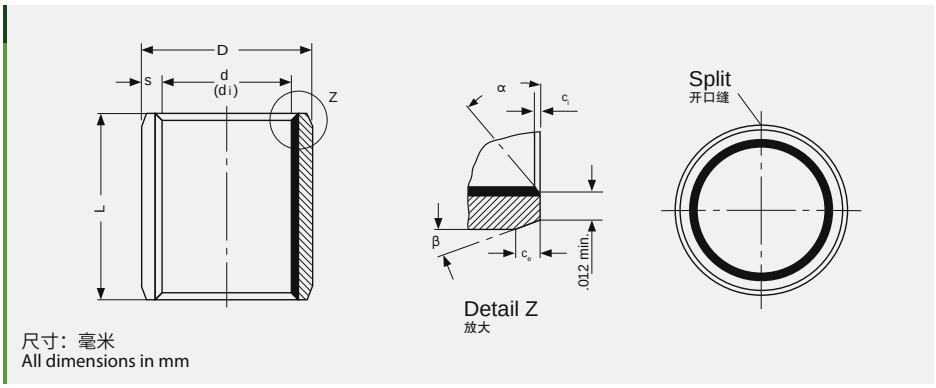

内外倒角尺寸表
Inside & Outide Chamfers

壁厚 Wall thickness	内倒角 ID Chamfer		外倒角 OD Chamfer	
	C_i	α	C_e	β
0.0315"	0.008"- 0.024"	30°- 45°	0.004"- 0.012"	30°- 45°
0.0471"	0.020"- 0.040"	20°- 30°	0.005"- 0.025"	40°- 55°
0.0627"-0.0928"	0.020"- 0.040"	15°- 25°	0.005"- 0.025"	40°- 50°

直套型号标注方式
Bushing Symbol

直套型号标注方式 Bushes Symbol	××	EU - □	××
直套内径 Bushing I. D.			
直套型号 Bushing Type			
直套高度 Bushing Length			

内径 Internal Diameter			外径 External Diameter		高度 Length	壁厚 Wall Thickness	型号 Part No
内径 d	装配轴径 Shaft-Φd_S	装配后内孔尺寸 Φd_i	外径 D	装配座孔 Housing-ΦD_H	L±0.01"	S	
3/16	0.1865 0.1858	0.1893 0.1867	1/4	0.2503 0.2497	0.1875	0.0315 0.0305	03EU03
					0.2500		03EU04
					0.3700		03EU06
1/4	0.2490 0.2481	0.2518 0.2492	5/16	0.3128 0.3122	0.2500	0.0315 0.0305	04EU04
					0.3750		04EU06
5/16	0.3115 0.3106	0.3143 0.3117	3/8	0.3753 0.3747	0.3750	0.0315 0.0305	05EU06
					0.5000		05EU08
3/8	0.3740 0.3731	0.3769 0.3742	15/32	0.4691 0.4684	0.3750	0.0471 0.0461	06EU06
					0.5000		06EU08
					0.7500		06EU12
7/16	0.4365 0.4355	0.4394 0.4367	17/32	0.5316 0.5309	0.5000	0.0471 0.0461	07EU08
					0.7500		07EU12
1/2	0.4990 0.4980	0.5019 0.4992	19/32	0.5941 0.5934	0.3750	0.0471 0.0461	08EU06
					0.5000		08EU08
					0.6250		08EU10
					0.8750		08EU14
9/16	0.5615 0.5605	0.5644 0.5617	21/32	0.6566 0.6559	0.5000	0.0471 0.0461	09EU08
					0.7500		09EU12

内径 Internal Diameter			外径 External Diameter		高度 Length	壁厚 Wall Thickness	型号 Part No
内径 d	装配轴径 Shaft-Φd_S	装配后内孔尺寸 Φd_i	外径 D	装配座孔 Housing-ΦD_H	L±0.01"	S	
$^5/_8$	0.6240 0.6230	0.6270 0.6242	$^{23}/_{32}$	0.7192 0.7184	0.5000	0.0471 0.0461	**10 EU 08**
					0.6250		**10 EU 10**
					0.7500		**10 EU 12**
					0.8750		**10 EU 14**
$^3/_4$	0.7491 0.7479	0.7525 0.7493	$^7/_8$	0.8755 0.8747	0.5000	0.0627 0.0615	**12 EU 08**
					0.7500		**12 EU 12**
					1.0000		**12 EU 16**
$^7/_8$	0.8741 0.8729	0.8775 0.8743	1	1.0005 0.9997	0.7500	0.0627 0.0615	**14 EU 12**
					0.8750		**14 EU 14**
					1.000		**14 EU 16**
1	0.9991 0.9979	1.0026 0.9992	$1^1/_8$	1.1256 1.1246	0.7500	0.0627 0.0615	**16 EU 12**
					1.0000		**16 EU 16**
					1.5000		**16 EU 24**
$1^1/_8$	1.1238 1.1226	1.1278 1.1240	$1^9/_{32}$	1.2818 1.2808	0.7500	0.0784 0.0770	**18 EU 12**
					1.0000		**18 EU 16**
$1^1/_4$	1.2488 1.2472	1.2528 1.2490	$1^{13}/_{32}$	1.4068 1.4058	0.7500	0.0784 0.0770	**20 EU 12**
					1.0000		**20 EU 16**
					1.2500		**20 EU 20**
					1.7500		**20 EU 28**
$1^3/_8$	1.3738 1.3722	1.3778 1.3740	$1^{17}/_{32}$	1.5318 1.5308	1.0000	0.0784 0.0770	**22 EU 16**
					1.3750		**22 EU 22**
					1.7500		**22 EU 28**
$1^1/_2$	1.4988 1.4972	1.5028 1.4990	$1^{21}/_{32}$	1.6568 1.6558	1.0000	0.0784 0.0770	**24 EU 16**
					1.2500		**24 EU 20**
					1.5000		**24 EU 24**
					2.0000		**24 EU 32**
$1^5/_8$	1.6238 1.6222	1.6278 1.6240	$1^{25}/_{32}$	1.7818 1.7808	1.0000	0.0784 0.0770	**26 EU 16**
					1.5000		**26 EU 24**
$1^3/_4$	1.7487 1.7471	1.7535 1.7489	$1^{15}/_{16}$	1.9381 1.9371	1.0000	0.0941 0.0923	**28 EU 16**
					1.5000		**28 EU 24**
					1.7500		**28 EU 28**
					2.0000		**28 EU 32**

内径 Internal Diameter			外径 External Diameter		高度 Length	壁厚 Wall Thickness	型号 Part No
内径 d	装配轴径 Shaft-Φd_S	装配后内孔尺寸 Φd_i	外径 D	装配座孔 Housing-ΦD_H	L±0.01"	S	
$1\frac{7}{8}$	1.8737 1.8721	1.8787 1.8739	$2\frac{1}{16}$	2.0633 2.0621	1.0000	0.0941 0.0923	**30EU16**
					1.8750		**30EU30**
					2.2500		**30EU36**
2	1.9987 1.9969	2.0037 1.9989	$2\frac{3}{16}$	2.1883 2.1871	1.0000	0.0941 0.0923	**32EU16**
					1.5000		**32EU24**
					2.0000		**32EU32**
					2.5000		**32EU40**
$2\frac{1}{4}$	2.2507 2.2489	2.2573 2.2509	$2\frac{7}{16}$	2.4377 2.4365	2.0000	0.0928 0.0902	**36EU32**
					2.2500		**36EU36**
					2.5000		**36EU40**
					3.0000		**36EU48**
$2\frac{1}{2}$	2.5011 2.4993	2.5077 2.5013	$2\frac{11}{16}$	2.6881 2.6869	2.0000	0.0928 0.0902	**40EU32**
					2.5000		**40EU40**
					3.0000		**40EU48**
					3.5000		**40EU56**
$2\frac{3}{4}$	2.7500 2.7482	2.7566 2.7502	$2\frac{15}{16}$	2.9370 2.9358	2.0000	0.0928 0.0902	**44EU32**
					2.5000		**44EU40**
					3.0000		**44EU48**
					3.5000		**44EU56**
3	3.0000 2.9982	3.0068 3.0002	$3\frac{3}{16}$	3.1872 3.1858	2.5000	0.0928 0.0902	**48EU32**
					3.0000		**48EU48**
					3.7500		**48EU60**
$3\frac{1}{2}$	3.5000 3.4978	3.5068 3.5002	$3\frac{11}{16}$	3.6872 3.6858	2.5000	0.0928 0.0902	**56EU40**
					3.0000		**56EU48**
					3.7500		**56EU60**
4	4.0000 3.9978	4.0068 4.0002	$4\frac{3}{16}$	4.1872 4.1858	3.0000	0.0928 0.0902	**64EU48**
					3.7500		**64EU60**
					4.7500		**64EU76**
5	4.9986 4.9961	5.0056 4.9988	$5\frac{3}{16}$	5.1860 5.1844	3.0000	0.0928 0.0902	**80EU48**
					3.7500		**80EU60**
6	6.0000 5.9975	6.0070 6.0002	$6\frac{3}{16}$	6.1874 6.1858	3.0000	0.0928 0.0902	**96EU48**
					3.7500		**96EU60**
7	6.9954 6.9929	7.0026 6.9956	$7\frac{3}{16}$	7.1830 7.1812	3.7500		**112EU60**

5.6 EU 英制翻边规格及公差
EU Inch Flange Bushing Specification & Tolerance

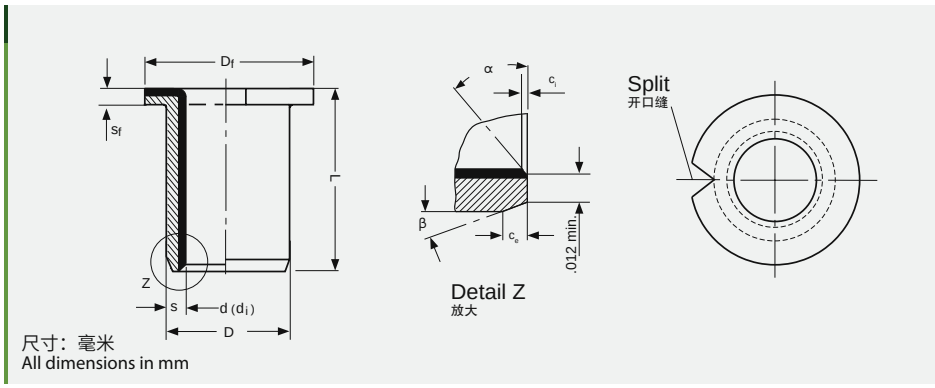

内外倒角尺寸表
Inside & Outide Chamfers

壁厚 Wall thickness	内倒角 ID Chamfer		外倒角 OD Chamfer	
	C_i	α	C_e	β
0.0315"	0.008"- 0.024"	30°- 45°	0.004"- 0.012"	30°- 45°
0.0471"	0.020"- 0.040"	20°- 30°	0.005"- 0.025"	40°- 55°
0.0627"-0.0928"	0.020"- 0.040"	15°- 25°	0.005"- 0.025"	40°- 50°

翻边套型号标注方式
Flange Bushing Symbol

翻边套型号标注方式 Flange Bushing Symbol	××	F	EU - □	××
翻边套内径 Flange Bushing I. D.				
翻边套 Flange				
轴承型号 Flange Bushing Type				
翻边套高度 Flange Bushing Length				

内径 d	装配轴径 Shaft-Φd_s	装配座孔 Housing ΦD_H	装配后内孔尺寸 Φd_i	法兰厚度 Flang Wall S_f	法兰外径 Flang Φ D_F	高度 Length L±0.01"	型号 Part No
3/8	0.3750 0.3740	0.4684 0.4691	0.3752 0.3779	0.047 0.039	11/16	1/4	**06F EU04**
						3/8	06F EU06
						1/2	06F EU08
1/2	0.5000 0.4990	0.5934 0.5941	0.5002 0.5029	0.047 0.039	13/16	1/4	08F EU04
						3/8	08F EU06
						1/2	08F EU08
5/8	0.6250 0.6240	0.7184 0.7192	0.6252 0.6280	0.047 0.039	15/16	3/8	10F EU06
						1/2	10F EU08
						5/8	10F EU10
3/4	0.7500 0.7488	0.8747 0.8755	0.7502 0.7534	0.063 0.055	1 1/8	3/8	12F EU06
						1/2	12F EU08
						3/4	12F EU12
7/8	0.8750 0.8738	0.9997 1.0005	0.8752 0.8784	0.063 0.055	1 1/4	1/2	14F EU08
						3/4	14F EU12
						1	14F EU16
1	1.0000 0.9988	1.1247 1.1255	1.0002 1.0034	0.063 0.055	1 3/8	1/2	16F EU08
						3/4	16F EU12
						1	16F EU16

5.7 EU 英制垫片规格及公差
EU Inch Thrust Washer Specification & Tolerance

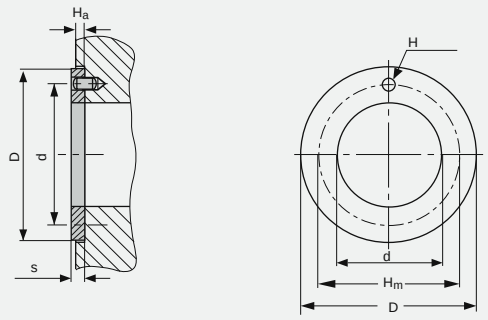

尺寸：英寸
All dimensions in inch

垫片型号标注方式
Washer Symbol

垫片型号标注方式 Washer Symbol	EU - □	WC	××
垫片型号 Washer Type			
垫片 Washer			
垫片内径 Washer I. D .			

内径 Internal Diameter d		外径 External Diameter D		壁厚 Thickness s	定位孔中心 Dowel Hole PCD-Φ H_m	定位孔直径 Dowel Hole-Φ H	Recess Depth H_a	型号 Part No
min.	max.	min.	max.	max. min.	±0.005"	±0.005"	max. min.	
0.500	0.510	0.865	0.875	0.063 0.061	0.6870	0.0720	0.050 0.040	**EU 06**
0.562	0.572	0.990	1.000	0.063 0.061	0.7810	0.0720	0.050 0.040	**EU 07**
0.625	0.635	1.115	1.125	0.063 0.061	0.8750	0.1040	0.050 0.040	**EU 08**
0.687	0.697	1.177	1.187	0.063 0.061	0.9370	0.1040	0.050 0.040	**EU 09**
0.750	0.760	1.240	1.250	0.063 0.061	1.0000	0.1040	0.050 0.040	**EU 10**
0.812	0.822	1.365	1.375	0.063 0.061	1.0940	0.1040	0.050 0.040	**EU 11**
0.875	0.885	1.490	1.500	0.063 0.061	1.1870	0.1350	0.050 0.040	**EU 12**
1.000	1.010	1.740	1.750	0.063 0.061	1.3750	0.1350	0.050 0.040	**EU 14**
1.125	1.135	1.990	2.000	0.063 0.061	1.5620	0.1660	0.050 0.040	**EU 16**
1.250	1.260	2.115	2.125	0.063 0.061	1.6870	0.1660	0.050 0.040	**EU 18**
1.375	1.385	2.240	2.250	0.063 0.061	1.8020	0.1660	0.050 0.040	**EU 20**
1.500	1.510	2.490	2.500	0.063 0.061	2.0000	0.1970	0.050 0.040	**EU 22**
1.625	1.635	2.615	2.625	0.063 0.061	2.1250	0.1970	0.050 0.040	**EU 24**
1.750	1.760	2.740	2.750	0.063 0.061	2.2500	0.1970	0.050 0.040	**EU 26**
2.000	2.010	2.990	3.000	0.093 0.091	2.5000	0.1970	0.080 0.070	**EU 28**
2.125	2.135	3.115	3.125	0.093 0.091	2.6250	0.1970	0.080 0.070	**EU 30**
2.250	2.260	3.240	3.250	0.093 0.091	2.7500	0.1970	0.080 0.070	**EU 32**

6 轴公差表(250)
Shaft Tolerance Table (250)

>	≤	c9	d8	e7	e8	f7	g6	h5	h6	h7	h8	js6	js7	k6	m6	n6	p6	p7	r6	s6
-	3	-60 -85	-20 -34	-14 -24	-14 -28	-6 -16	-2 -8	0 -4	0 -6	0 -10	0 -14	±3	±5	+6 0	+8 +2	+10 +4	+12 +6	+16 +6	+16 +10	+20 +14
3	6	-70 -100	-30 -48	-20 -32	-20 -38	-10 -22	-4 -12	0 -5	0 -8	0 -12	0 -18	±4	±6	+9 +1	+12 +4	+16 +8	+20 +12	+24 +12	+23 +15	+27 +19
6	10	-80 -116	-40 -62	-25 -40	-25 -47	-13 -28	-5 -14	0 -6	0 -9	0 -15	0 -22	±4.5	±7	+10 +1	+15 +6	+19 +10	+24 +15	+30 +15	+28 +19	+32 +23
10	18	-95 -138	-50 -77	-32 -50	-32 -59	-16 -34	-6 -17	0 -8	0 -11	0 -18	0 -27	±5.5	±9	+12 +1	+18 +7	+23 +12	+29 +18	+36 +18	+34 +23	+39 +28
18	24	-110 -162	-65 -98	-40 -61	-40 -73	-20 -41	-7 -20	0 -9	0 -13	0 -21	0 -33	±6.5	±10	+15 +2	+21 +8	+28 +15	+35 +22	+43 +22	+41 +28	+48 +35
24	30																			
30	40	-120 -182	-80 -119	-50 -75	-50 -89	-25 -50	-9 -25	0 -11	0 -16	0 -25	0 -39	±8	±12	+18 +2	+25 +9	+33 +17	+42 +26	+51 +26	+50 +34	+59 +43
40	50	-130 -192																		
50	65	-140 -214	-100 -146	-60 -90	-60 -106	-30 -60	-10 -29	0 -13	0 -19	0 -30	0 -46	±9.5	±15	+21 +2	+30 +11	+39 +20	+51 +32	+62 +32	+60 +41	+72 +53
65	80	-150 -224																	+62 +43	+78 +59
80	100	-170 -257	-120 -174	-72 -107	-72 -126	-36 -71	-12 -34	0 -15	0 -22	0 -35	0 -54	±11	±17	+25 +3	+35 +13	+45 +23	+59 +37	+72 +37	+73 +51	+93 +71
100	120	-180 -267																	+76 +54	+101 +79
120	140	-200 -300	-145 -208	-85 -125	-85 -148	-43 -83	-14 -39	0 -18	0 -25	0 -40	0 -63	±12.5	±20	+28 +3	+40 +15	+52 +27	+68 +43	+83 +43	+88 +63	+117 +92
140	160	-210 -310																	+90 +65	+125 +100
160	180	-230 -330																	+93 +68	+133 +108
180	200	-240 -355	-170 -242	-100 -146	-100 -172	-50 -96	-15 -44	0 -20	0 -29	0 -46	0 -72	±14.5	±23	+33 +14	+46 +17	+60 +31	+79 +50	+96 +50	+106 +77	+151 +122
200	225	-260 -375																	+109 +80	+159 +130
225	250	-280 -395																	+113 +84	+169 +140
250	280	-300 -430	-190 -271	-110 -162	-110 -191	-56 -108	-17 -49	0 -23	0 -32	0 -52	0 -81	±16	±26	+36 +14	+52 +20	+66 +34	+88 +56	+108 +56	+126 +94	+190 +158
280	315	-330 -460																	+130 +98	+202 +170
315	355	-360 -500	-210 -299	-125 -182	-125 -214	-62 -119	-18 -54	0 -25	0 -36	0 -57	0 -89	±18	±28	+40 +4	+57 +21	+73 +37	+98 +62	+119 +62	+114 +108	+226 +190
355	400	-400 -540																	+150 +114	+244 +208
400	450	-440 -595	-230 -327	-135 -198	-135 -232	-68 -131	-20 -60	0 -27	0 -40	0 -63	0 -97	±20	±31	+45 +5	+63 +23	+80 +40	+108 +68	+131 +68	+166 +126	+272 +232
450	500	-480 -635																	+172 +132	+292 +252

7 座孔公差表(250)
Housing Tolerance Table (250)

>	≤	B10	C9	D8	E7	E8	F7	G7	H6	H7	H8	JS7	K7	M7	N7	P7	R7	S7	T7
-	3	+180 +140	+85 +60	+34 +20	+24 +14	+28 +14	+16 +6	+12 +2	+6 0	+10 0	+14 0	±5	0 -10	-2 -12	-4 -14	-6 -16	-10 -20	-14 -24	-
3	6	+188 +140	+100 +70	+48 +30	+32 +20	+38 +20	+22 +10	+16 +4	+8 0	+12 0	+18 0	±6	+3 -9	0 -12	-4 -16	-8 -20	-11 -23	-15 -27	-
6	10	+208 +150	+116 +80	+62 +40	+40 +25	+47 +25	+28 +13	+20 +5	+9 0	+15 0	+22 0	±7	+5 -10	0 -15	-4 -19	-9 -24	-13 -28	-17 -32	-
10	14	+200 +150	+138 +95	+77 +50	+50 +32	+59 +32	+34 +16	+24 +6	+11 0	+18 0	+27 0	±9	+6 -12	0 -18	-5 -23	-11 -29	-16 -34	-21 -39	-
14	18																		
18	24	+244 +160	+162 +110	+98 +65	+61 +40	+73 +40	+41 +20	+28 +7	+13 0	+21 0	+33 0	±10	+6 -15	0 -21	-7 -28	-14 -35	-20 -41	-27 -48	-
24	30																		-33 -54
30	40	+270 +170	+182 +120	+119 +80	+75 +50	+89 +50	+50 +25	+34 +9	+16 0	+25 0	+39 0	±12	+7 -18	0 -25	-8 -33	-17 -42	-25 -50	-34 -59	-39 -64
40	50	+280 +180	+192 +130																-45 -70
50	65	+310 +190	+214 +140	+146 +100	+90 +60	+106 +60	+60 +30	+40 +10	+19 0	+30 0	+46 0	±15	+9 -21	0 -30	-9 -39	-21 -51	-30 -60	-42 -72	-55 -85
65	80	+320 +200	+224 +150														-32 -62	-48 -78	-64 -94
80	100	+360 +220	+257 +170	+174 +120	+107 +72	+125 +72	+71 +36	+47 +12	+22 0	+35 0	+54 0	±17	+10 -25	0 -35	-10 -45	-24 -59	-38 -73	-58 -93	-78 -113
100	120	+380 +240	+267 +180														-41 -76	-66 -101	-91 -126
120	140	+420 +260	+300 +200	+208 +145	+125 +85	+148 +85	+83 +43	+54 +14	+25 0	+40 0	+63 0	±20	+12 -28	0 -40	-12 -52	-28 -68	-48 -88	-77 -117	-107 -147
140	160	+440 +280	+310 +210														-50 -90	-85 -125	-119 -159
160	180	+470 +310	+330 +230														-53 -93	-93 -133	-131 -171
180	200	+525 +340	+355 +240	+242 +170	+146 +100	+172 +100	+96 +50	+61 +15	+29 0	+46 0	+72 0	±23	+13 -33	0 -46	-14 -60	-33 -79	-60 -106	-105 -151	-149 -195
200	225	+565 +380	+375 +260														-63 -109	-113 -159	-163 -209
225	250	+605 +420	+395 +280														-67 -113	-123 -169	-179 -225
250	280	+690 +480	+430 +300	+271 +190	+162 +110	+191 +110	+108 +56	+69 +17	+32 0	+52 0	+81 0	±26	+16 -36	0 -52	-14 -66	-36 -88	-74 -126	-138 -190	-198 -250
280	315	+750 +540	+460 +330														-78 -130	-150 -202	-220 -272
315	355	+830 +600	+500 +360	+299 +210	+182 +125	+214 +125	+119 +62	+75 +18	+36 0	+57 0	+89 0	±28	+17 -40	0 -57	-16 -73	-41 -98	-87 -144	-169 -226	-247 -304
355	400	+910 +680	+540 +400														-93 -150	-187 -224	-273 -330
400	450	+1010 +760	+595 +440	+327 +230	+198 +135	+232 +135	+131 +68	+83 +20	+40 0	+63 0	+97 0	±31	+18 -45	0 -63	-17 -80	-45 -108	-103 -166	-209 -272	-307 -370
450	500	+1090 +840	+635 +480														-109 -172	-229 -292	-337 -400

8 卷制轴套检测
Wrapped Bushing Measurement

在自由状态下，卷制类轴套有一定的开口缝，不能精确的测量外径和内径。所以，卷制类轴承的内外径应有专业的测量工具和设备进行。
In free state, wrapped bushing will not be closed, which is impossble to accurately measure External diameter & Internal diameter. When wrapped bushing Measured, special gauges and test equipments is necessary.

外径检测
Test external diameter
ISO 3547-2 TEST B

轴套用力压入环规通规（最大加力250N）通过
Press the bushing into Go ring gange. And push bushing throngh by hand (Max. force 250N)
用上述同样方法和相同力压入环规止端不通过
Use the above same way & press, bushing can not go into No Go ring gauge.

内径检测
Test Internal diameter
ISO 3547-2 TEST C

当轴套压入环规，塞规通端通过用较小力，塞规止端通过用较大力不超过250N
Press the bushing into ring gauge. The Go plug gauge could be inserted by a light pressure. The No Go plug gauge could not be inserted by heary pressure (Max.force 250N)
注意：轴套压入环规，轴套外径可能会永久减小
Note: When the bushing is pressed into ring gauge, external diameter could be permanent reduction.

壁厚测量
Wall thickness Meaurment

轴套壁厚测量: 按轴套高度在轴套轴向上测量一点，两点或三点。
The wall thickness of bushing is measured by professional gauge at one, two, or three positions according to bushing length.

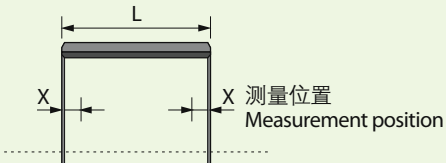

L [mm]	X [mm]	Measurement position
L≤15	L/2	1
15＜L≤50	4	2
50＜L≤90	6 and L/2	3
L＞90	8 and L/2	3

BEHAM Techn. Handels GmbH

„wir sind“ Klimabündnis Betrieb

Technik, die bewegt!
www.beham.com

A-4910 RIED
Bahnhofstraße 67a
T: +43 / (0)7752 / 879 31-0
info@beham.com