EMT

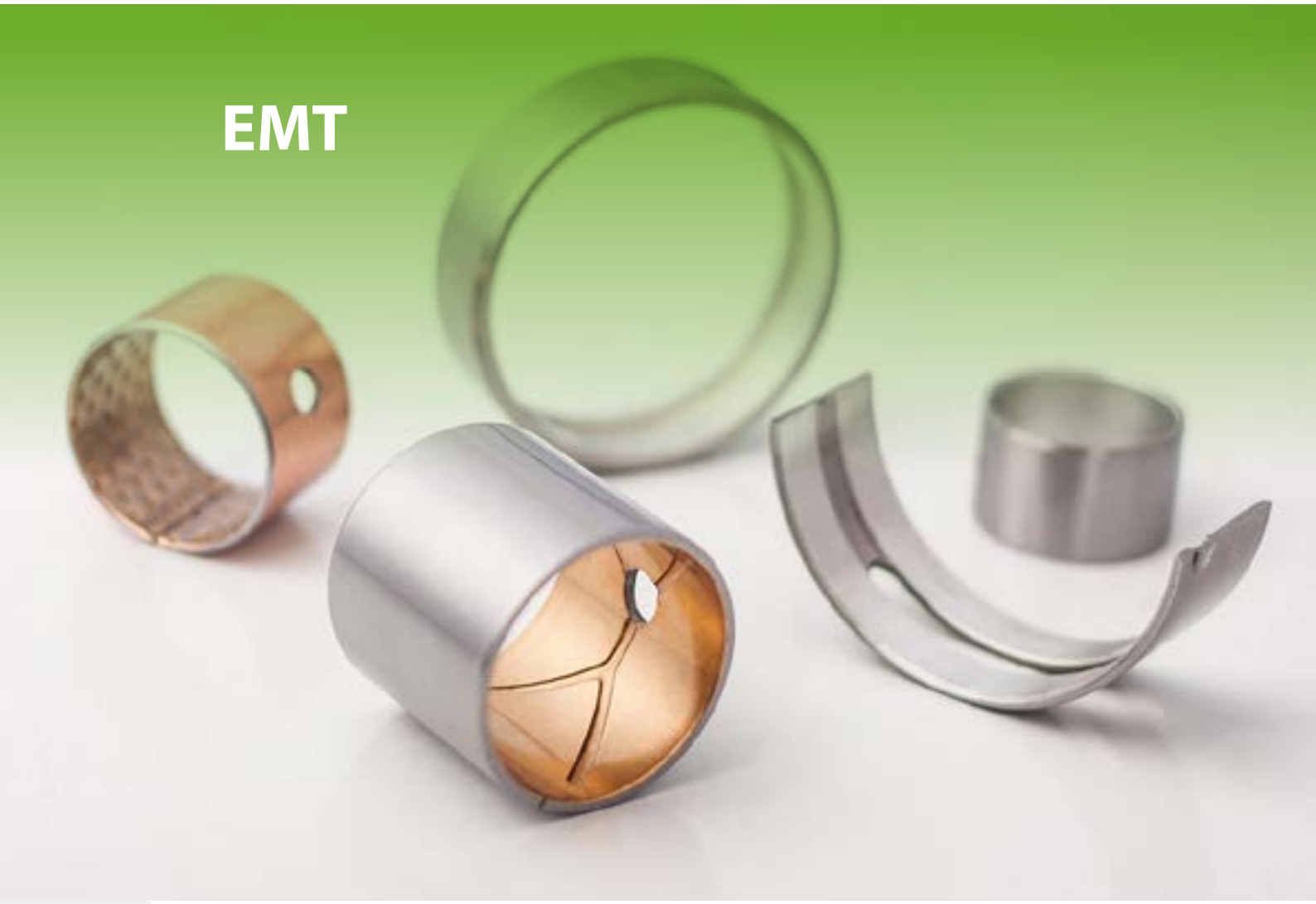

www.beham.com

BEHAM

目录
INDEX

1 轴套材质 Bushing Material

1.1 EMT 产品介绍 ..... P 4
EMT Brief Description

1.2 EMT 双金属轴承技术参数 ..... P 5
EMT Bimetallic Material Characteristics

1.3 EMT 产品润滑设计 ..... P 5
EMT Lubrication Design

1.4 EMT 产品搭口形式 ..... P 6
EMT Split Gap Design

1.5 EMT 产品油孔设计 ..... P 6
EMT Oil Hole Design

1.6 EMT 产品运用 ..... P 6
EMT Application

2 轴套设计 Bushing Design

2.1 轴套选型 ..... P 7
Bushing Design

2.2 轴套PV值（承载 P和速度V） ..... P 8
Bushing PV Value
(Load P & Velocity V)

3 轴套装配 Bushing Installation

3.1 轴套接触面设计 ..... P 9
Bushing Arrangememt Design

3.2 轴套座孔设计 ..... P 10
Housing Design

3.3 轴套压装 ..... P 11
Bushing Installation

3.4 止推垫片和滑块装配 ..... P 12
Thrust Washers & Plate Installation

4 规格和公差 Specification & Tolerance

4.1 EMT 规格及公差 ..... P 13
EMT Bushing Specication & Tolerance

5 轴公差表 Shaft tolerance table ..... P 16

6 座孔公差表 Housing tolerance table ..... P 17

7 卷制轴套检测 Wrapped Bushing Measurement ..... P 18

1 轴承材质 Bushing Material

1.1 EMT 产品介绍 EMT Brief Description

EMT 双金属系列产品是用碳钢为基材，表面烧结青铜粉或轧制铝锡合金。工作表面可以设计排布油槽或油穴以适应有油条件下润滑工作。EMT双金属可以代替一般滑动部件的铜套，具有薄壁，重量轻的特点,有较好的耐疲劳强度和承载能力。

EMT bi-metallic bushing is formed from steel strips with alloy lining material. The alloy lined surface can be machined oil grooves, holes, formed Indentations etc according to different application. It is suitable for high load, lower speed oscillation & rotation movement.

1.2 EMT 双金属轴承技术参数
EMT Bimetallic Material Characteristics

技术参数 Data	型号 Part No	EMT-1	EMT-2	EMT-3	EMT-4	EMT-5
EMT 产品结构 EMT Structure						
		钢 Steel + $CuPb_{10}Sn_{10}$	**钢 Steel + $CuPb_{24}Sn_4$**	**钢 Steel + $CuPb_{30}$**	**钢 Steel + $AlSn_{20}Cu$**	**钢Steel + CuSn8Ni**
相应代号	**Corresponding Code**	SAE-792(SAE797). JIS-LBC3.	SAE-799. JIS-LBC6.	SAE-48. JIS-KJ3	SAE-783. JIS-AJL.	
		Clevite F100. GGB-SY. Daido L10. Federal Mogul HF-2F. Glyco 66.	Daido L23. Glyco 68		Federal Mogul TR-20. Glyco 74.	
最大承载压力P	**Max Load Capacity P**	150N/mm^2	130N/mm^2	120N/mm^2	100N/mm^2	140N/mm^2
脂润滑	**Greaes Lubrication**					
最大线速度 V	Max Speed	2.5m/s	2.5m/s			
最高PV值	Maximum PV Value	2.8N/mm^2 · m/s	2.8N/mm^2 · m/s	2.5N/mm^2 · m/s		
摩擦系数u	Coefficient of friction	0.05~0.15	0.06~0.16			
流体(油)润滑	**(Oil)Lubrication**					
最大线速度 V	Max Speed	10m/s	10m/s	15m/s	25m/s	
最高PV值	Maximum PV Value	10N/mm^2 · m/s	10N/mm^2 · m/s	8N/mm^2 · m/s	6N/mm^2 · m/s	
摩擦系数u	Coefficient of friction	0.05~0.12	0.05~0.15	0.06~0.17	0.06~0.17	
最高温度	**Max Working Temperature**					
脂润滑	Greaes Lubrication	150°C	150°C	170°C	150°C	
流体润滑	Lubrication	250°C	250°C	250°C	250°C	200°C
合金硬度	Alloy Hardness	60~100HB	45~70HB	30~45HB	30~40HB	70~120HB

1.3 EMT 产品润滑设计
EMT Lubrication Design

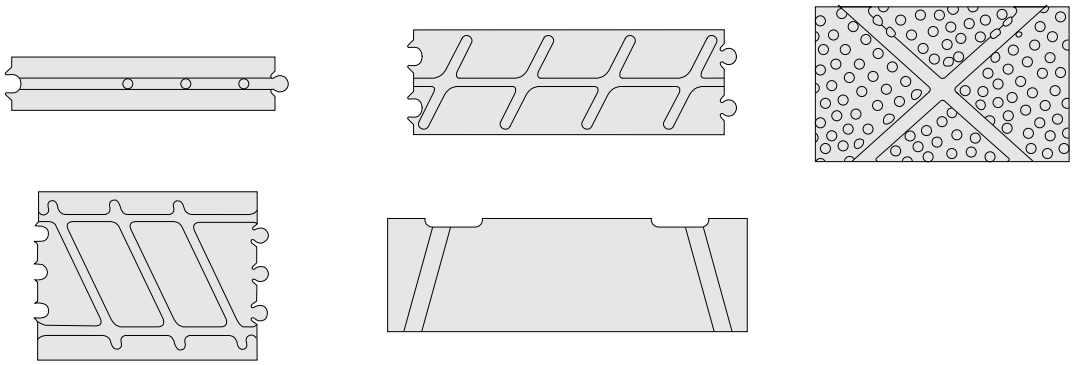

1.4 EMT 产品搭口形式
EMT Split Gap Design

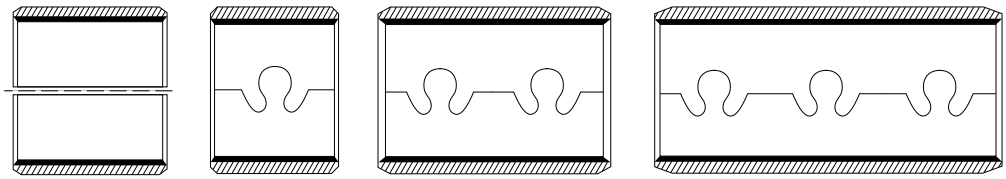

1.5 EMT 产品油孔设计
EMT Oil Hole Design

在产品设计中，如使用以下推荐油孔，能使EMT产品在使用中得到充分的油润滑。如无特殊要求，此油孔设计亦可适用。

Oil Hole is necessary to design if EMT have lubricated sufficiently; the following oil hole design is recommended, which is also suitable for EMT series without special requirements.

轴套外经 (D) Bushing O.D. (D)	Φ14＞D ≤ 22	Φ22＞D ≤ 40	Φ40＞D ≤ 50	Φ50＞D ≤ 100	Φ100＞D ≤ 180
油孔直径 (mm) Oil Hole Diameter (mm)	3	4	5	6	7

1.6 EMT 产品运用
EMT Application

EMT-1	有很高的耐疲劳强度，高承载能力，高的抗冲击能力及耐磨损，适用于中载，中到高速的场合如齿轮箱，摇臂轴套，主梢，传动装置，普通轴套等 Advantageous in high load carrying capacity, anti-impact, lower wear. Suitable for Mid-load capacity & Mid-higher Sliding velocitie. Bushings for Gearbox, Rocker arm, King Pin, transmission etc.
EMT-2	有较高的抗疲劳强度、承载能力及抗冲击力、有较好的表面滑动性能，产品适用于中速、中载。表面镀软合金时可用于高速内燃机主轴套和连杆轴套。 Higher fatige strength & load carrying capacity, goos running characteristics at higher sliding velocities. Suitable for Mid-load capacity & Mid-Sliding velocitie . Bushings for lubricating oil pumps . After surface specifical treatment, Bushings for Main bushes of high speed internal-combustion engine, Connecting Rod etc .
EMT-3	有很好的滑动性能，良好的抗咬性。是一种特殊的材料，表面不适加工油槽和油穴，一般需镀镀软合金。适用于高速中低载荷的内燃机主轴套和连杆轴套轴套，也可用于液压泵，自动齿轮箱等。 Very Good sliding Characteristics, good anti-seizure property, special material, Punched oil grooves & oil pockets are not feasible. Bushings suitable for hydraulic Pump,automatic gearbox. After surface specifical treatment, bushings for main bushes of high speed, medium-low load internal-combustion engine, Connecting Rod etc.
EMT-4	有中等疲劳强度和承载能力，较好的滑动性能，产品适用于高速低载内燃机轴瓦、空压机、制冷机、准双曲面齿轮箱、液压泵、齿轮箱等。 Mid fatige strength & load carrying capacity, very good fatige strength & load carrying capacity, very good sliding characteristics . Bushings for half-bearing of high speed, lower load internal-combushtion engine, aircomressor, refrigerator, hypoid gearbox, hydraulic pump, gearbox etc.
EMT-5	该产品的材料成份符合RoHS指令要求，在特定条件下可取代EMT-1产品，产品承载压力大，耐磨性好，其缺点是不能不加油使用，所以，在油润滑充分的场合，有其很大的优势。适用于、重载、中载、中到高速，以及有大冲击载荷的应用等。 The material composition of the product conform to the requirements of the RoHS, under certain conditions can replace the EMT-1, has good load pressure & good wear resistance. The disadvantage is that it cannot be used without oil lubricant. But has great advantage in a well-lubricated situation. Suitable for heavy & medium load, Medium & high speed, as well as large impact loads.

4 规格和公差
Specification & Tolerance

4.1 EMT 直套规格及公差
EMT Sleeve Bushing Specification & Tolerance

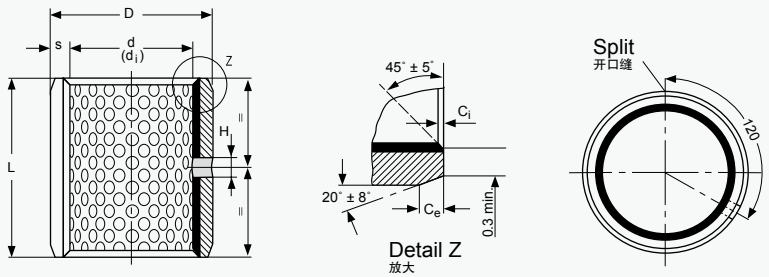

尺寸：毫米
All dimensions in mm

尺寸和公差参照ISO 3547
Dimensions and Tolerances according to ISO 3547

内外倒角尺寸表
Inside & Outide Chamfers

壁厚 Wall thickness S	内倒角 Inside Chafmer C_i	外倒角 Outside Chamfer C_e
1.00	0.30±0.20	0.60±0.40
1.50	0.40±0.30	0.60±0.40
2.00	0.40±0.30	1.20±0.40
2.50	0.60±0.30	1.80±0.60

直套型号标注方式
Bushing Symbol

直套型号标注方式 Bushes Symbol	EMT - □	××	××
直套型号 Bushing Type			
直套内径 Bushing I.D.			
直套高度 Bushing Length			

内径 Internal Diameter			外径 External Diameter			高度 Length	壁厚 Wall Thickness	油孔直径 Oil Hole-Φ H	型号 Part No
内径 d	装配轴径 Shaft-Φd_S	装配后内径 Φd_a	外径 D	装配座孔 Housing-ΦD_H	理论外径公差 O.D. ΦD_t	ID<80 L±0.25 ID>80 L±0.50	S		
15	15.000 14.973	15.148 15.010	17	17.018 17.000	+0.065 +0.030	10	0.995 0.935	4	EMT 1510
						15			EMT 1515
						20			EMT 1520
16	16.000 15.973	16.148 16.010	18	18.018 18.000		10			EMT 1610
						15			EMT 1615
						20			EMT 1620
18	18.000 17.973	18.151 18.010	20	20.021 20.000	+0.075 +0.035	15			EMT 1815
						20			EMT 1820
						25			EMT 1825
20	20.000 19.967	20.181 20.020	23	23.021 23.000		10	1.490 1.430		EMT 2010
						15			EMT 2015
						20			EMT 2020
						25			EMT 2025
						30			EMT 2030
22	22.000 21.967	22.181 22.020	25	25.021 25.000		10		6	EMT 2210
						15			EMT 2215
						20			EMT 2220
						25			EMT 2225

内径 Internal Diameter			外径 External Diameter			高度 Length	壁厚 Wall Thickness	油孔直径 Oil Hole-Φ H	型号 Part No
内径 d	装配轴径 Shaft-Φd_S	装配后内径 Φd_a	外径 D	装配座孔 Housing-ΦD_H	理论外径公差 O.D. ΦD_t	ID<80 L±0.25 ID>80 L±0.50	S		
25	25.000 24.967	25.181 25.020	28	28.021 28.000	+0.075 +0.035	15	1.490 1.430	6	EMT 2515
						20			EMT 2520
						25			EMT 2525
						30			EMT 2530
28	28.000 27.967	28.205 28.030	32	32.025 32.000	+0.085 +0.045	15	1.980 1.920		EMT 2815
						20			EMT 2820
						25			EMT 2825
						30			EMT 2830
						40			EMT 2840
30	30.000 29.967	30.205 30.030	34	34.025 34.000		15			EMT 3015
						20			EMT 3020
						25			EMT 3025
						30			EMT 3030
						40			EMT 3040
32	32.000 31.961	32.205 32.030	36	36.025 36.000		20			EMT 3220
						30			EMT 3230
						40			EMT 3240
						50			EMT 3250
35	35.000 34.961	35.205 35.030	39	39.025 39.000		20			EMT 3520
						25			EMT 3525
						30			EMT 3530
						40			EMT 3540
40	40.000 39.961	40.205 40.030	44	44.025 44.000		20		8	EMT 4020
						25			EMT 4025
						30			EMT 4030
						40			EMT 4040
						50			EMT 4050
45	45.000 44.961	45.205 45.030	50	50.025 50.000		25	2.460 2.400		EMT 4525
						30			EMT 4530
						40			EMT 4540
						50			EMT 4550
50	50.000 49.961	50.210 50.030	55	55.030 55.000	+0.100 +0.055	30			EMT 5050
						40			EMT 5030
						50			EMT 5040
						60			EMT 5050

内径 Internal Diameter			外径 External Diameter			高度 Length	壁厚 Wall Thickness	油孔直径 Oil Hole-Φ H	型号 Part No
内径 d	装配轴径 Shaft-Φd_s	装配后内径 Φd_a	外径 D	装配座孔 Housing-ΦD_H	理论外径公差 O.D. ΦD_t	ID<80 L±0.25 ID>80 L±0.50	S		
55	55.000 54.954	55.210 55.030	60	60.030 60.000	+0.100 +0.055	40	2.460 2.400	8	EMT 5540
						50			EMT 5550
						60			EMT 5560
60	60.000 59.954	60.210 60.030	65	65.030 65.000		30			EMT 6030
						40			EMT 6040
						50			EMT 6050
						60			EMT 6060
65	65.000 59.954	65.210 65.030	70	70.030 70.000		40			EMT 6540
						50			EMT 6550
						60			EMT 6560
						70			EMT 6570
70	70.000 69.954	70.210 70.030	75	75.030 75.000		40			EMT 7040
						50			EMT 7050
						60			EMT 7060
						80			EMT 7080
75	75.000 74.954	75.210 75.030	80	80.030 80.000		40		9.5	EMT 7540
						50			EMT 7550
						60			EMT 7560
						80			EMT 7580
80	80.000 79.954	80.210 80.030	85	85.035 85.000	+0.120 +0.070	40			EMT 8040
						50			EMT 8050
						60			EMT 8060
						80			EMT 8080
85	85.000 84.946	85.215 85.030	90	90.035 90.000		60			EMT 8560
						80			EMT 8580
90	90.000 89.946	90.215 90.030	95	95.035 95.000		50			EMT 9050
						60			EMT 9060
						80			EMT 9080
100	100.000 99.946	100.215 100.030	105	105.035 105.000		60			EMT 10060
						70			EMT 10070
						80			EMT 10080
120	120.000 119.946	120.220 120.030	125	125.040 125.000	+0.170 +0.100	50			EMT 12050
						60			EMT 12060
135	135.000 134.937	135.220 135.030	140	140.040 140.000		60			EMT 13560
						80			EMT 13580

Tolerance

5 轴公差表(250)
Shaft Tolerance Table (250)

≥	<	c9	d8	e7	e8	f7	g6	h5	h6	h7	h8	js6	js7	k6	m6	n6	p6	p7	r6	s6
-	3	-60 -85	-20 -34	-14 -24	-14 -28	-6 -16	-2 -8	0 -4	0 -6	0 -10	0 -14	±3	±5	+6 0	+8 +2	+10 +4	+12 +6	+16 +6	+16 +10	+20 +14
3	6	-70 -100	-30 -48	-20 -32	-20 -38	-10 -22	-4 -12	0 -5	0 -8	0 -12	0 -18	±4	±6	+9 +1	+12 +4	+16 +8	+20 +12	+24 +12	+23 +15	+27 +19
6	10	-80 -116	-40 -62	-25 -40	-25 -47	-13 -28	-5 -14	0 -6	0 -9	0 -15	0 -22	±4.5	±7	+10 +1	+15 +6	+19 +10	+24 +15	+30 +15	+28 +19	+32 +23
10	18	-95 -138	-50 -77	-32 -50	-32 -59	-16 -34	-6 -17	0 -8	0 -11	0 -18	0 -27	±5.5	±9	+12 +1	+18 +7	+23 +12	+29 +18	+36 +18	+34 +23	+39 +28
18	24	-110 -162	-65 -98	-40 -61	-40 -73	-20 -41	-7 -20	0 -9	0 -13	0 -21	0 -33	±6.5	±10	+15 +2	+21 +8	+28 +15	+35 +22	+43 +22	+41 +28	+48 +35
24	30																			
30	40	-120 -182	-80 -119	-50 -75	-50 -89	-25 -50	-9 -25	0 -11	0 -16	0 -25	0 -39	±8	±12	+18 +2	+25 +9	+33 +17	+42 +26	+51 +26	+50 +34	+59 +43
40	50	-130 -192																		
50	65	-140 -214	-100 -146	-60 -90	-60 -106	-30 -60	-10 -29	0 -13	0 -19	0 -30	0 -46	±9.5	±15	+21 +2	+30 +11	+39 +20	+51 +32	+62 +32	+60 +41	+72 +53
65	80	-150 -224																	+62 +43	+78 +59
80	100	-170 -257	-120 -174	-72 -107	-72 -126	-36 -71	-12 -34	0 -15	0 -22	0 -35	0 -54	±11	±17	+25 +3	+35 +13	+45 +23	+59 +37	+72 +37	+73 +51	+93 +71
100	120	-180 -267																	+76 +54	+101 +79
120	140	-200 -300	-145 -208	-85 -125	-85 -148	-43 -83	-14 -39	0 -18	0 -25	0 -40	0 -63	±12.5	±20	+28 +3	+40 +15	+52 +27	+68 +43	+83 +43	+88 +63	+117 +92
140	160	-210 -310																	+90 +65	+125 +100
160	180	-230 -330																	+93 +68	+133 +108
180	200	-240 -355	-170 -242	-100 -146	-100 -172	-50 -96	-15 -44	0 -20	0 -29	0 -46	0 -72	±14.5	±23	+33 +14	+46 +17	+60 +31	+79 +50	+96 +50	+106 +77	+151 +122
200	225	-260 -375																	+109 +80	+159 +130
225	250	-280 -395																	+113 +84	+169 +140
250	280	-300 -430	-190 -271	-110 -162	-110 -191	-56 -108	-17 -49	0 -23	0 -32	0 -52	0 -81	±16	±26	+36 +14	+52 +20	+66 +34	+88 +56	+108 +56	+126 +94	+190 +158
280	315	-330 -460																	+130 +98	+202 +170
315	355	-360 -500	-210 -299	-125 -182	-125 -214	-62 -119	-18 -54	0 -25	0 -36	0 -57	0 -89	±18	±28	+40 +4	+57 +21	+73 +37	+98 +62	+119 +62	+114 +108	+226 +190
355	400	-400 -540																	+150 +114	+244 +208
400	450	-440 -595	-230 -327	-135 -198	-135 -232	-68 -131	-20 -60	0 -27	0 -40	0 -63	0 -97	±20	±31	+45 +5	+63 +23	+80 +40	+108 +68	+131 +68	+166 +126	+272 +232
450	500	-480 -635																	+172 +132	+292 +252

6 座孔公差表(250)
Housing Tolerance Table (250)

≥	<	B10	C9	D8	E7	E8	F7	G7	H6	H7	H8	JS7	K7	M7	N7	P7	R7	S7	T7
-	3	+180 +140	+85 +60	+34 +20	+24 +14	+28 +14	+16 +6	+12 +2	+6 0	+10 0	+14 0	±5	0 -10	-2 -12	-4 -14	-6 -16	-10 -20	-14 -24	-
3	6	+188 +140	+100 +70	+48 +30	+32 +20	+38 +20	+22 +10	+16 +4	+8 0	+12 0	+18 0	±6	+3 -9	0 -12	-4 -16	-8 -20	-11 -23	-15 -27	-
6	10	+208 +150	+116 +80	+62 +40	+40 +25	+47 +25	+28 +13	+20 +5	+9 0	+15 0	+22 0	±7	+5 -10	0 -15	-4 -19	-9 -24	-13 -28	-17 -32	-
10	14	+200 +150	+138 +95	+77 +50	+50 +32	+59 +32	+34 +16	+24 +6	+11 0	+18 0	+27 0	±9	+6 -12	0 -18	-5 -23	-11 -29	-16 -34	-21 -39	-
14	18																		
18	24	+244 +160	+162 +110	+98 +65	+61 +40	+73 +40	+41 +20	+28 +7	+13 0	+21 0	+33 0	±10	+6 -15	0 -21	-7 -28	-14 -35	-20 -41	-27 -48	-
24	30																		-33 -54
30	40	+270 +170	+182 +120	+119 +80	+75 +50	+89 +50	+50 +25	+34 +9	+16 0	+25 0	+39 0	±12	+7 -18	0 -25	-8 -33	-17 -42	-25 -50	-34 -59	-39 -64
40	50	+280 +180	+192 +130																-45 -70
50	65	+310 +190	+214 +140	+146 +100	+90 +60	+106 +60	+60 +30	+40 +10	+19 0	+30 0	+46 0	±15	+9 -21	0 -30	-9 -39	-21 -51	-30 -60	-42 -72	-55 -85
65	80	+320 +200	+224 +150														-32 -62	-48 -78	-64 -94
80	100	+360 +220	+257 +170	+174 +120	+107 +72	+125 +72	+71 +36	+47 +12	+22 0	+35 0	+54 0	±17	+10 -25	0 -35	-10 -45	-24 -59	-38 -73	-58 -93	-78 -113
100	120	+380 +240	+267 +180														-41 -76	-66 -101	-91 -126
120	140	+420 +260	+300 +200	+208 +145	+125 +85	+148 +85	+83 +43	+54 +14	+25 0	+40 0	+63 0	±20	+12 -28	0 -40	-12 -52	-28 -68	-48 -88	-77 -117	-107 -147
140	160	+440 +280	+310 +210														-50 -90	-85 -125	-119 -159
160	180	+470 +310	+330 +230														-53 -93	-93 -133	-131 -171
180	200	+525 +340	+355 +240	+242 +170	+146 +100	+172 +100	+96 +50	+61 +15	+29 0	+46 0	+72 0	±23	+13 -33	0 -46	-14 -60	-33 -79	-60 -106	-105 -151	-149 -195
200	225	+565 +380	+375 +260														-63 -109	-113 -159	-163 -209
225	250	+605 +420	+395 +280														-67 -113	-123 -169	-179 -225
250	280	+690 +480	+430 +300	+271 +190	+162 +110	+191 +110	+108 +56	+69 +17	+32 0	+52 0	+81 0	±26	+16 -36	0 -52	-14 -66	-36 -88	-74 -126	-138 -190	-198 -250
280	315	+750 +540	+460 +330														-78 -130	-150 -202	-220 -272
315	355	+830 +600	+500 +360	+299 +210	+182 +125	+214 +125	+119 +62	+75 +18	+36 0	+57 0	+89 0	±28	+17 -40	0 -57	-16 -73	-41 -98	-87 -144	-169 -226	-247 -304
355	400	+910 +680	+540 +400														-93 -150	-187 -224	-273 -330
400	450	+1010 +760	+595 +440	+327 +230	+198 +135	+232 +135	+131 +68	+83 +20	+40 0	+63 0	+97 0	±31	+18 -45	0 -63	-17 -80	-45 -108	-103 -166	-209 -272	-307 -370
450	500	+1090 +840	+635 +480														-109 -172	-229 -292	-337 -400

7 卷制轴套检测
Wrapped Bushing Measurement

在自由状态下，卷制类轴套有一定的开口缝，不能精确的测量外径和内径。所以，卷制类轴承的内外径应有专业的测量工具和设备进行。
In free state, wrapped bushing will not be closed, which is impossble to accurately measure External diameter & Internal diameter. When wrapped bushing Measured, special gauges and test equipments is necessary.

外径检测
Test external diameter
ISO 3547-2 TEST B

轴套用力压入环规通规（最大加力250N）通过
Press the bushing into Go ring gange. And push bushing throngh by hand (Max. force 250N)
用上述同样方法和相同力压入环规止端不通过
Use the above same way & press, bushing can not go into No Go ring gauge.

内径检测
Test Internal diameter
ISO 3547-2 TEST C

当轴套压入环规，塞规通端通过用较小力，塞规止端通过用较大力不超过250N
Press the bushing into ring gauge. The Go plug gauge could be inserted by a light pressure. The No Go plug gauge could not be inserted by heary pressure (Max.force 250N)
注意：轴套压入环规，轴套外径可能会永久减小
Note: When the bushing is pressed into ring gauge, external diameter could be permanent reduction.

壁厚测量
Wall thickness Meaurment

轴套壁厚测量: 按轴套高度在轴套轴向上测量一点，两点或三点。
The wall thickness of bushing is measured by professional gauge at one, two, or three positions according to bushing length.

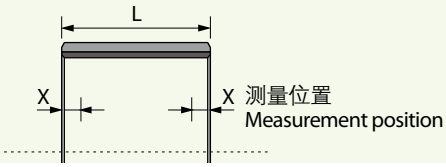

L [mm]	X [mm]	Measurement position
L≤15	L/2	1
15＜L≤50	4	2
50＜L≤90	6 and L/2	3
L＞90	8 and L/2	3

Trotz großer Sorgfalt können wir Druck- und Satzfehler nicht ausschließen. Wir können daher keine Garantie für die Richtigkeit der angegebenen Zeichnungen und Maße übernehmen. Dieser Katalog stellt nur einen Auszug aus unserem reichhaltigen Lieferprogramm dar. Für Typen die nicht im Katalog angeführt sind, erbitten wir Ihre gesonderte Anfrage. Im weiteren verweisen wir auf unsere Geschäftsbedingungen unter www.beham.com.

BEHAM Techn. Handels GmbH

„wir sind“ Klimabündnis Betrieb

Technik, die bewegt!
www.beham.com

BEHAM

A-4910 RIED
Bahnhofstraße 67a
T: +43 / (0)7752 / 879 31-0
info@beham.com