www.beham.com

BEHAM

目录
INDEX

1 轴承材质
Bushing Material

1.1 EB65 产品介绍
EB65 Brief Description

EB65 固体润滑轴承(滑板)是在轴承基体的金属摩擦面上开出大小适当、排列有序的孔穴，然后孔穴中嵌入具有独特自润滑性能的成型固体润滑剂(固体润滑剂面积一般为摩擦面积的20%一30%)而制成的自润滑轴承。该轴承综合了金属基体和特殊配方润滑材料的各自优点，突破了一般轴承依靠油膜润滑的局限性。固体润滑轴承特别适用于无油、高温、高负载、低速度、防污、防蚀、防辐射、以及在水中或真空溶液浸润而根本无法加润滑油的特殊工况条件下使用。该产品广泛应用于冶金设备、模具、水利工程、灌装设备、水轮机、气轮机、仪器仪表以及矿山机械、船舶机械、纺织机械、航天航海等领域，也适用于一般工程机械。

EB65 固体润滑轴承的基体应根据轴承自身的工况条件而定。比较常用的材料有高力黄铜、锡青铜、铸铁等。嵌入的固体润滑材料主要是石墨及添加剂，不同的添加剂适用于不同的工况。根据轴承自身工况条件，通过不同金属基体和嵌入固体润滑剂的组合，可保证产品能满足各种温度、负荷、运动和介质等工况条件下的特殊需要，同时保证稳定可靠地工作。

1.1 EB65 产品介绍
EB65 Brief Description

EB65 Solid lubricated bushing are sliding blocks are self-lubricated bushing are obtained by means of drilling orderly arranged holes in proper size on the surface of metallic matrix of the bushing before filling the solid lubricant with self-lubrication capability (the area of the solid lubricant applied is usually 20% to 30% of the abrasion area). The bushing integrate the advantages of both the metallic matrix and the specially formulated lubricants and break through the limitation of the ordinary bushing, which depends on the oil for lubrication. The solid lubdcant bushing are especially suitable for oil-free, high-temperature, high-load, low-speed,anti-fouling, anti-corrosion, anti-radioactivity circumstances as well as the special circumstances in water or vacuum settings where it is impossible to add oil for lubrications. This product is widely applied to the steel rolling equipments, filling equipments, water turbines, steam turbines, instruments and meters as well as mine machineries, vessel machineries, textlie machineres, ship building industry, cosmonautics and navigation, etc.They can be used for general engineering machineries too.

The base materials of solid lubricant bushing shall be determined according to the working conditions of the bushing. The commonly used material is high-strength copper, tin bronze and cast iron, etc. The filled solid lubricant is mainly graphite and addictives. Various addictives are for various working conditions. Therefore, according to the working conditions of the bushing, a mix of metallic matrix and filled solid lubricant can enable the products to meet the specific requirements in vanous conditions with various temperatures, loads, movements and ambient substances and meanwhile, ensure stabilized and reliable functioning.

1.2 EB65 固体润滑轴承的使用特点
EB65 Features of The Solid Lubricant Bearings

1、设计灵活、简单、方便、使用范围广：

供油系统在机械设计上是一件费工费时的事，使用固体润滑轴承在设计时不需要考虑加油装置，节约了加油装置设备．同时可以针对各种特殊场合，把固体润滑轴承设计成各种形状，以满足各种特殊场合需要，使用固体润滑轴承，可以大幅减少机械检修，油料等费用。

2、无油可以使用：

由于固体润滑剂的线膨胀系数大于金属基体，因此当固体润滑轴承开始运转时，油膜会转移到对磨件上而实现自润滑，所以固体润滑轴承可以使用在难以加油以及不能加油或油脂的地方，即使在低速高负载的情况下，也能起到良好的润滑作用。

3、使用成本低：

传统的机械设计，在一定的操作时间内，要经常加油保养，检查油表，供油装置是否畅通，因定期加油导致机体本身及周边环境污染，造成维护保养成本的增加，实现自润滑后，不但可以实现环境整洁，而且大大降低了使用润滑油的成本。

4、高承载、低转速情况下．可发挥优越的性能：

固体润滑轴承是用离心铸造的高强度黄铜作基体，起到承载负荷的作用，用具有良好自润滑性能的特殊配方的石墨作润滑剂起到自润滑作用，因此它综合了它们各自的优点。即使在高承载，低速情况下仍可发挥优越的性能。

5、往复运动，摇动运动、起动停止频繁等油膜形成困难的场所，可发挥优越的耐磨性：

固体润滑轴承润滑剂的排列原则是保证对磨件在运转过程中各个部位都有润滑剂作用，因此排列润滑剂时必须根据对磨件的运动方向来确定润滑剂的排布位置。

6、优越的耐药品性及耐蚀性；

固体润滑轴承的润滑剂是用特殊配方的石墨、PTEE等耐磨材料制成的，它具有稳定的分子结构，金属基体可以根据不同金属具有不同的耐药品性和耐蚀性来选择，因此固体润滑轴承具有优越的耐药品性和耐蚀性。

7、产品成本更具竞争力，与同类产品相比，工作寿命较长，所需维护保养甚少，替代更换周期长，性能好。

1.3 EB65 固体润滑轴承的使用特点
EB65 Features of The Solid Lubricant Bearings

1. Flexible design, simple, convenient with wide applications

The designing of oil-feeding system is both a labor consuming and time consuming job. Therefore, the neglecting of oil-feeding apparatus in the designing of solid lubricant bearings saves the cost of oil-feeding apparatus. Besides, for various specific circumstances, the solid lubricant bearings can be designed into various types to meet the requirements thereof. The use of solid lubricant bearings can greatly reduce the cost of mechanical maintenance and oil.

2. Functional in absence of oil

Since the linear expansibility of solid lubricant is greater than metallic matrix's, when the movement of solid lubricant bearings(SLB)start, the lubricant is transferred onto the parts in abrasion thus realizing the self-lubrication. Therefore, the SLBs can be used in circumstances where oiling and greasing is difficult or impossible and they perform excellent lubrication even under low-speed and high load circumstances.

3. Cost efficiency

The traditional mechanical designing requires frequent oiling maintenance; oil gauge check shall be performed to ensure the passage of oil supplying apparatus is clear. Since the periodical oiling can cause pollution to the machines themselves as well as to the ambient surroundings, resulting in an increase of the maintenance cost,the realization of self-lubrication can not only make the environment clean but greatly reduce the lubricating costs as well.

4. Excellent performance under high-load, low-speed circumstances

The SLBs are made of rotational cast high-strength copper as the matrix, which functions as load bearers.Besides, SLBs use specially formulated graphite as lubricant, ensuing excellent self-lubrication. Combining the advantages of both the matrix and lubricant, SLBs are capable of exert their wonderful performance in circumstances with high load and low speed.

5. In circumstances where it is difficult for the oil films to generate, such as the alternative movements, swinging movements and frequent on-and-off, SLBs highlights their excellent resistance to abrasion.

As the principle of the arrangement of SLB lubricant is to ensure that each part of the equipment is involved in the lubrication throughout the movement, the location of the lubricant shall be determined according to the movement direction of the parts in abrasion.

6. Excellent chemical resistance and corrosion resistance

The lubricant for SLB is formulated out of the abrasion-resistant materials such as graphite and PTEE and has stabilized molecular structure. The metallic matrix can be selected according to the various chemical resistance and corrosion resistance accordingly. Therefore, the SLB enjoys high chemical resistance and corrosion resistance.

7. The cost of the products is more competitive and compared with other products of the same kind, the SLB features in longer service hours, less maintenance, longer replacement period and better performance.

2 基材合金 Base Alloy

2.1 EB65 主要基材合金 EB65 Main Base Alloy

物理性能和化学成分 Phy. Performance. & Chemical Compositions / 基材合金 Base Alloy	高力黄铜 CuZn25Al6FeMn3 EB65	高力黄酮 CuZn25Al6FeMn3 EB66	铜合金 CuSn5Pb5Zn5 EB85	铜合金 CuAl10Ni EB80	铜合金 CuSn12 EB88	铸铁 Cast Iron HT250 EB00
Cu%	65	65	85	80	88	
Sn%			5		12	
Pb%			5			
Zn%	25	25	5			
Ni%				5		
Al%	6	6		10		
Fe%				5		
Mn%	4	4				
密度 g/cm^3 Dengity	8.0	8.0	8.8	8.3	8.8	7.3
硬度 HB Hardness	>210	>180	>70	>150	>80	>160
抗拉强度 N/mm^2 Tensile Strength	>750	>550	>200	>500	>360	>250
伸长率 % Elongation	>12	>12	15	>10	>8	
热胀系数 Coefficient of linear expansion	$1.9\cdot10^{-5}$/°C	$1.9\cdot10^{-5}$/°C	$1.8\cdot10^{-5}$/°C	$1.6\cdot10^{-5}$/°C	$1.8\cdot10^{-5}$/°C	$1.0\cdot10^{-5}$/°C
温度°C Limit Temp.	300～400	300～400	400	400	400	400
最大动承载 Max. Load N/mm^2	100	80	60	50	70	10
最大线速度 Max. Speed m/min	15	15	10	20	10	15
最大 PV Max. PV N/mm^2·m/min	200	200	200	200	200	40
压缩永久变形量 400N/mm^2	<0.01	<0.01	<0.05	<0.04	<0.05	<0.015

磨擦系数: 油润滑0.03, 干磨擦: 0.16
Friction of coe. Oil 0.03; Dry 0.16

2.2 EB65 基材合金牌号
EB65 Alloy International Code

中国牌号 Chinese Code GB1776-87	相当国外牌号 International counterparts				适用情况 Applications
	国际 International ISO 1338	日本 Japan Jis	美国 (USA) ASTM (UNS)	德国 German DIN	
CuZn25Al6FeMn3	CuZn25Al6FeMn3	H5102 CAC304	B30-92 C86300	DIN1709 G-CuZn25A/2.0598	高载荷、低速、一般用 High-load, low speed, general use
CuZn25Al6FeMn3	CuZn25Al6FeMn3	H3102 CAC304	B30-92 C86300	DIN1709 G-CuZn25A/2.0598	超高载荷、低速、高承载用 Super high load, low-speed, high duty
CuAl10Fe3	CuAl10Fe3	H5114 CAC703	B30-92 95800	DIN1714 GB-CuAl10NI/2.1096	中载荷、中速、一般用 Medium load, medium-speed, general use
CuSn5Pb5Zn5	QSn5-5-5	H5111 CAC406	B30-92 C83600	DIN1705 G-Cu5n5ZnPb/2.1096	中载荷、中速 Medium load, medium-speed
DB5675-85 HT250		Fe250	ASTM class40		低载荷、低速 low-load, low-speed

2.3 EB65 固体润滑剂
EB65 Solid Lubricant

固体润滑剂 Solid Lubricant	特性 Features	典型用途 Typical application
固体润滑剂SL1 (PTFE等） SL1(PTFE etc + Add)	很好的耐磨性和化学稳定性，使用温度＜400°C Excellent resistance against chemical attacks and low friction. Temp limit 400°C	适用于一般机械，在大气中使用， Suite for general machines and under atmosphere
固体润滑剂SL2 (PTFE等） SL2(PTFE etc + Add2)	极低的摩擦系数和很好的水润滑性，使用温度＜300°C Lowest in friction and good of water lubrication,Temp.limit 300°C	适用于水、海水润滑、如船舶，水工弧门，水轮机，制药饮料机械等。 Ship, hydraulic turbine, gas turbine etc.

3 规格和公差 Specification & Tolerance

3.1 EB65.01 自润轴套 EB65.01 Straight Bushings

相配轴推荐公差等级
Tollerance recommended

d8 高载荷 high load
e7 轻载荷 light load
f7 高精度 high precision

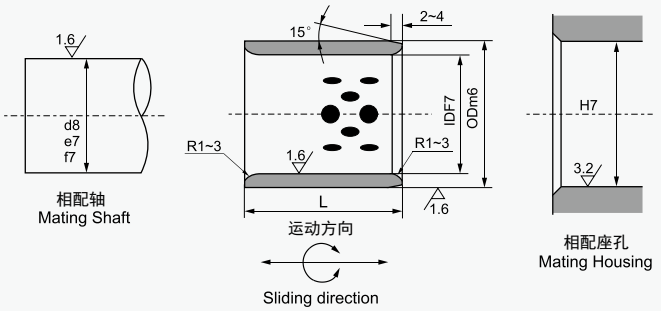

d	D	IDF7		ODm6		L -0.10 -0.30													
						8	10	12	15	16	20	25	30	35	40	50	60	70	80
8	12	8	+0.028 +0.013	12	+0.018 +0.007	081208	081210	081212	081215										
10	14	10		14		101408	101410	101412	101415		101420								
12	18	12	+0.034 +0.016	18	+0.021 +0.008		121810	121812	121815	121816	121820	121825	121830						
13	19	13		19			131910		131915	131916									
14	20	14		20			142010	142012	142015		142020	142025	142030						
15	21	15		21			152110	152112	152115	152116	152120	152125	152130						
16	22	16		22			162210	162212	162215	162216	162220	162225	162230	162235	162240				
18	24	18		24				182412	182415	182416	182420	182425	182430	182435	182440				
20	28	20	+0.041 +0.020	28			202810	202812	202815	202816	202820	202825	202830	202835	202840	202850			
22	32	22		32	+0.025 +0.009			223212	223215		223220	223225							
25	33	25		33				253312	253315	253316	253320	253325	253330	253335	253340	253350	253360		
30	38	30		38				303812	303815		303820	303825	303830	303835	303840	303850	303860		
35	45	35	+0.050 +0.025	45							354520	354525	354530	354535	354540	354550	354560		
40	50	40		50							405020	405025	405030	405035	405040	405050	405060	405070	405080
45	55	45		55	+0.030 +0.011								455530	455535	455540	455550	455560		
50	60	50		60									506030	506035	506040	506050	506060	506070	506080

3.1 EB65.01 自润轴套
EB65.01 Straight Bushings

d	D	IDF7		ODm6		L -0.10 -0.30											
						30	35	40	50	60	70	80	100	120	130	140	150
50	62	50	+0.050 +0.025	62		506230	506235	506240	506250	506260	506270						
50	65	50		65		506530		506540	506550	506560	506570	506580	5065100				
55	70	55		70				557040	557050	557060	557070						
60	74	60		74	+0.030 +0.011	607430	607435	607440	607450	607460	607470	607480					
60	75	60		75		607530	607535	607540	607550	607560	607570	607580	6075100				
63	75	63		75						637560	637570	637580					
65	80	65		80					658050	658060	658070	658080					
70	85	70	+0.060 +0.030	85			708535	708540	708550	708560	708570	708580	7085100				
70	90	70		90					709050	709060	709070	709080					
75	90	75		90						759060	759070	759080	7590100				
75	95	75		95						759560	759570	759580	7595100				
80	96	80		96	+0.035 +0.013			809640	809650	809660	809670	809680	8096100	8096120			
80	100	80		100				8010040	8010050	8010060	8010070	8010080	80100100	80100120		80100140	
90	110	90		110		9011030			9011050	9011060	9011070	9011080	90110100	90110120			
100	120	100	+0.071 +0.036	120						10012060	10012070	10012080	100120100	100120120		100120140	
110	130	110		130								11013080	110130100	110130120			
120	140	120		140								12014080	120140100	120140120		120140140	
125	145	125		145									125145100	125145120			
130	150	130		150	+0.040 +0.015								130150100		130150130		
140	160	140	+0.083 +0.043	160									140160100			140160140	
150	170	150		170									150170100				150170150
160	180	160		180									160180100				160180150

3.2 EB65.02 自润翻边轴套
EB65.02 Shoulder Bushings

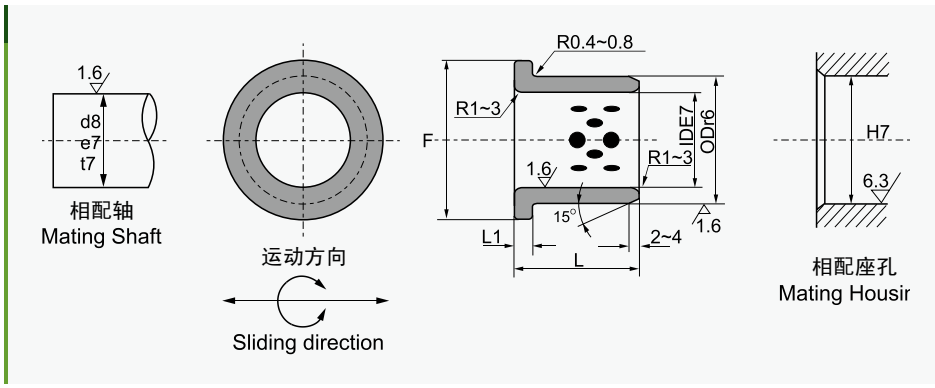

d	D	IDE7		ODr6		F	L1 -0.10	L -0.10 -0.30									
								15	20	25	30	35	40	50	60	80	100
10	14	10	+0.040 +0.025	14	+0.034 +0.023	22	2	1015	1020								
12	18	12		18		25		1215	1220								
13	19	13		19		26		1315	1320								
14	20	14	+0.050 +0.032	20		27	3	1415	1420								
15	21	15		21	+0.041 +0.028	28		1515	1520	1525	1530						
16	22	16		22		29		1615	1620	1625	1630						
20	30	20		30		40		2015	2020	2025	2030		2040				
25	35	25	+0.061 +0.040	35		45		2515	2520	2525	2530		2540				
30	40	30		40		50			3020	3025	3030	3035	3040	3050			
31.5	40	31.5		40	+0.050 +0.034				3120			3135					
35	45	35		45		60	5		3520		3530		3540	3550			
40	50	40	+0.075 +0.050	50		65			4020		4030		4040	4050			
45	55	45		55		70					4530		4540	4550	4560		
50	60	50		60	+0.060 +0.041	75					5030		5040	5050	5060		
55	65	55		65		80							5540		5560		
60	75	60		75	+0.062 +0.043	90							6040	6050		6080	
63	75	63	+0.090 +0.060	75		85	7.5									6367	
70	85	70		85		105								7050		7080	
75	90	75		90	+0.073 +0.051	110									7560		
80	100	80		100		120									8060	8080	80100
90	110	90		110	+0.076 +0.054	130	10								9060	9080	
100	120	100	+0.107 +0.072	120		150										10080	100100
120	140	120		140	+0.088 +0.063	170										12080	120100

3.3 EB65.03 自润止推垫片
EB65.03 Thrust Washers

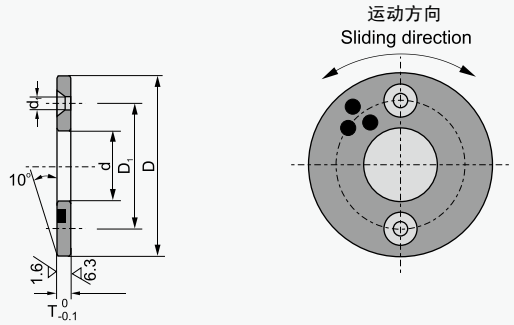

d	D	T	螺栓 Bolt				型号 Part No
			$D_{1\ -0.1}^{\ 0}$	数量 Q'ty	尺寸 size	d_1	
10.2	30	3	---	---	---	---	**EB65.03-10**
12.2	40		28	2	M3	3.5	**EB65.03-12**
13.2							**EB65.03-13**
14.2							**EB65.03-14**
15.2	50		35				**EB65.03-15**
16.2							**EB65.03-16**
			---	---	---	---	**EB65.03-16N**
18.2			35	2	M3	3.5	**EB65.03-18**
20.2		5			M5	6	**EB65.03-20**
			---	---	---	---	**EB65.03-20N**
25.2	55		40	2	M5	6	**EB65.03-25**
			---	---	---	---	**EB65.03-25N**
30.2	60		45	2	M5	6	**EB65.03-30**
35.2	70		50				**EB65.03-35**
40.2	80	7	60		M6	7	**EB65.03-40**
45.3	90		67.5				**EB65.03-45**
50.3	100	8	75	4			**EB65.03-50**
55.3	110		85				**EB65.03-55**
60.3	120		90		M8	9	**EB65.03-60**
65.3	125		95				**EB65.03-65**
70.3	130	10	100				**EB65.03-70**
75.3	140		110				**EB65.03-75**
80.3	150		120				**EB65.03-80**
90.5	170		140		M10	11	**EB65.03-90**
100.5	190		160				**EB65.03-100**
120.5	200		175				**EB65.03-120**

3.4 EB65.04 自润翻遍轴套
EB65.04 Shoulder Bushings

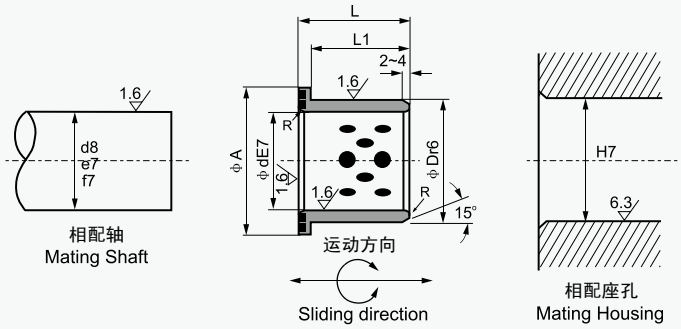

ϕd	E7	ϕD	r6	ϕA	L1 $^{-0.10}_{-0.30}$	L $^{-0.10}_{-0.30}$	型号 Part No
12	+0.050 +0.032	18	+0.034 +0.023	25	11	15	**EB65.04-12×15**
16		22	+0.041 +0.028	30	15	20	**EB65.04-16×20**
20	+0.061 +0.040	28		36	20	25	**EB65.04-20×25**
25		33	+0.050 +0.034	43	25	30	**EB65.04-25×30**
30		38		48	30	35	**EB65.04-30×35**
40	+0.075 +0.050	50		60	40	45	**EB65.04-40×45**
50		62	+0.060 +0.041	75	49	55	**EB65.04-50×55**
60	+0.090 +0.060	75	+0.062 +0.043	90	58	65	**EB65.04-60×65**

3.5 EB65.05 自润翻遍轴套
EB65.05 Guide Pin Bushings (VD23356)

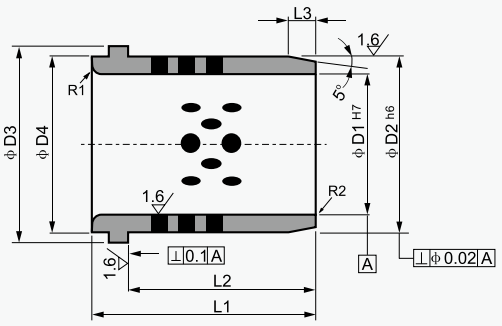

D1	H7	D2	h6	$D3_{-0.50}$	$D4_{-0.25}$	$L1_{-1.5}$	$L2_{-0.80}$	L3	R1	型号 Part No
32	+0.025 −0	40	0 −0.016	50	40	50	40	4	3	**EB65.05-32×50**
40		50		63	50	63	50	5	3	**EB65.05-40×63**
50		63	0 −0.019	71	63	71	56	6	5	**EB65.05-50×71**
63	+0.003 −0	80		90	80	80	63	8	6	**EB65.05-63×80**
80		100	0 −0.022	112	100	100	80	10	8	**EB65.05-80×100**
100	+0.035 −0	125	0 −0.025	140	125	125	106	12	10	**EB65.05-100×125**
115		140		155	140	140	120	12	10	**EB65.05-115×140**

3.6 EB65.06 自润导向套
EB65.06 Guide Ejector Bushings

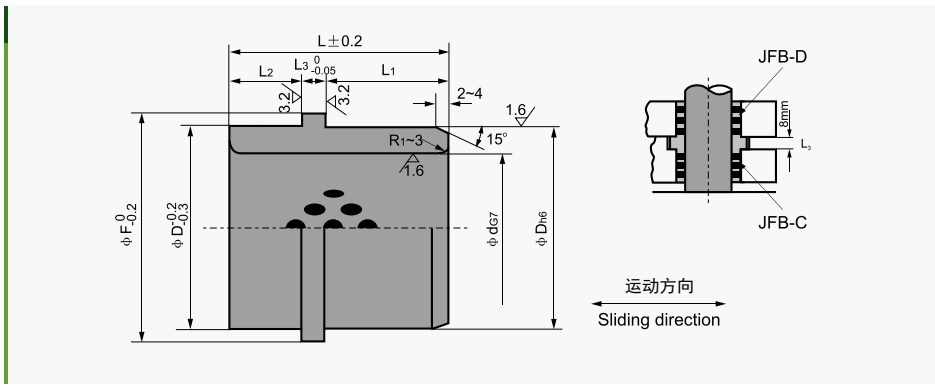

Φd G7		ΦD h6		ΦF	L	L_1	L_2	L_3	型号 Part No
16	+0.024 +0.006	25	0 -0.013	30	26	12	10	4	EB65.06-C-16×26
					28	14			EB65.06-C-16×28
					33	19			EB65.06-C-16×33
					38	24			EB65.06-C-16×38
20	+0.028 +0.007	30		35	26	12			EB65.06-C-20×26
					28	14			EB65.06-C-20×28
					33	19			EB65.06-C-20×33
					38	24			EB65.06-C-20×38
25		35	0 -0.016	40	26	12			EB65.06-C-25×26
					28	14			EB65.06-C-25×28
					33	19			EB65.06-C-25×33
					38	24			EB65.06-C-25×38
30		40		45	33	14	15		EB65.06-C-30×33
					38	19			EB65.06-C-30×38
					43	24			EB65.06-C-30×43
32	+0.034 +0.009	42		47	38	19			EB65.06-C-32×38
					43	24			EB65.06-C-32×43
					48	29			EB65.06-C-32×48
35			0 -0.019	50	38	19			EB65.06-C-35×38
		46			43	24			EB65.06-C-35×43
					48	29			EB65.06-C-35×48
40		52		57	48	24	20		EB65.06-C-40×48
					53	29			EB65.06-C-40×53

Φd G7		ΦD h6		ΦF	L	L_1	L_2	L_3	型号 Part No
30	+0.028 +0.007	42	0 -0.016	47	37	14	15	8	EB65.06-D-K-30×37
					42	19			EB65.06-D-K-30×42
					47	24			EB65.06-D-K-30×47
					52	29			EB65.06-D-K-30×52
40	+0.034 +0.009	55	0 -0.019	60	53	20	25		EB65.06-D-K-40×53
					57	24			EB65.06-D-K-40×57
		50	0 -0.016	55	60	32	20		EB65.06-D-K-40×60
		55		60	67	29	30		EB65.06-D-K-40×67
		50		55	70	42	20		EB65.06-D-K-40×70
50		62	0 -0.019	67	67	29	30		EB65.06-D-K-50×67
					87	39	40		EB65.06-D-K-50×87
60	+0.040 +0.010	74		82	67	29	30		EB65.06-D-K-60×67
					87	39	40		EB65.06-D-K-60×87

3.7 EB65.07 自润导向套
EB65.07 Guide Post Bushings

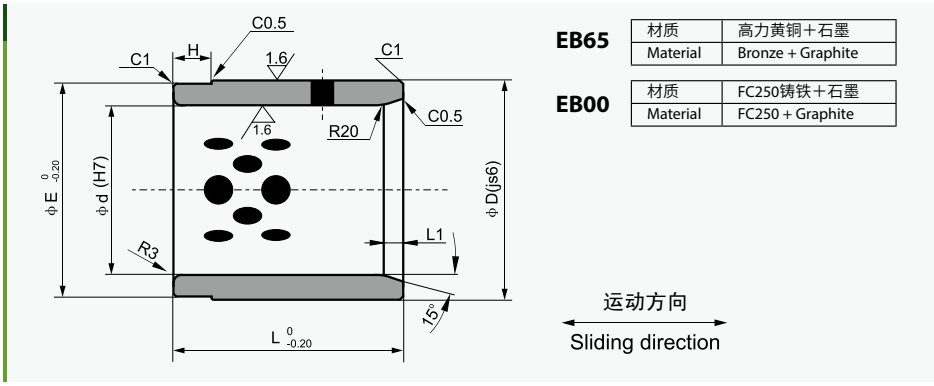

尺寸 Specification	ΦD	Φd	L	ΦE	H	L1	型号 Part No
50×30×50	50	30	50	49	10	5	**EB65.07-A-30**
60×40×60	60	40	60	59	10		**EB65.07-A-40**
70×50×75	70	50	75	69	15		**EB65.07-A-50**
80×60×90	80	60	90	79	20	10	**EB65.07-A-60**
100×80×120	100	80	120	99	25		**EB65.07-A-80**
120×100×150	120	100	150	119	25		**EB65.07-A-100**
140×120×180	140	120	180	139	25		**EB65.07-A-120**
50×30×50	50	30	50	49	10	5	**EB65.07-B-30**
60×40×60	60	40	60	59	10		**EB65.07-B-40**
70×50×75	70	50	75	69	15		**EB65.07-B-50**
80×60×90	80	60	90	79	20	10	**EB65.07-B-60**
100×80×120	100	80	120	99	25		**EB65.07-B-80**
120×100×150	120	100	150	119	25		**EB65.07-B-100**
140×120×180	140	120	180	139	25		**EB65.07-B-120**

3.8 EB65.08 自润球铰
EB65.08 Spherical Bushings

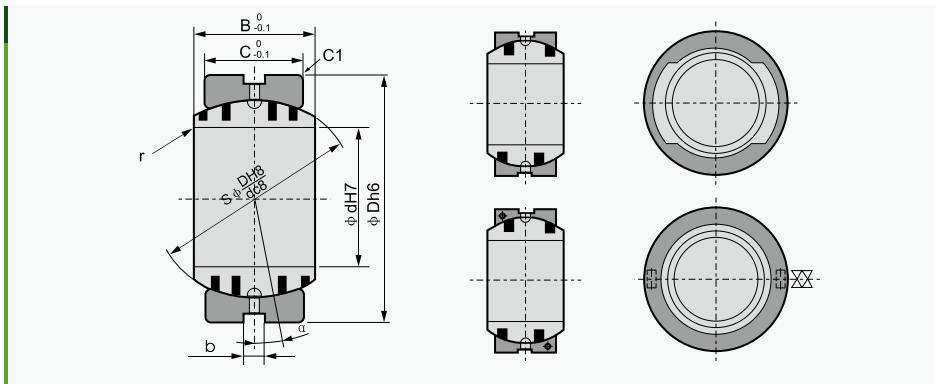

Dimension							调整角度 Aligning angle σ°	Type	型号 Part No
ϕd H7	ϕD h6	$B_{-0.1}$	$C_{-0.10}$	ϕG	r	b			
15	26	12	9	22	R0.5	4	8	A	**EB65.08-015**
20	32	16	14	28			4		**EB65.08-020**
25	42	21	18	36			5		**EB65.08-025**
30	50	27	23	44	R1		6		**EB65.08-030**
35	55	30	26	49			5		**EB65.08-035**
40	62	33	28	55			6		**EB65.08-040**
50	80	42	36	70			5		**EB65.08-050**
60	100	53	45	90			6		**EB65.08-060**
70	110	58	50	99			5		**EB65.08-070**
80	130	70	60	115			6		**EB65.08-080**
90	140	76	65	125		6	6		**EB65.08-090**
100	160	88	75	145			6	B	**EB65.08-100**

3.9 EB65.09 自润滑板
EB65.09 Wear Strips

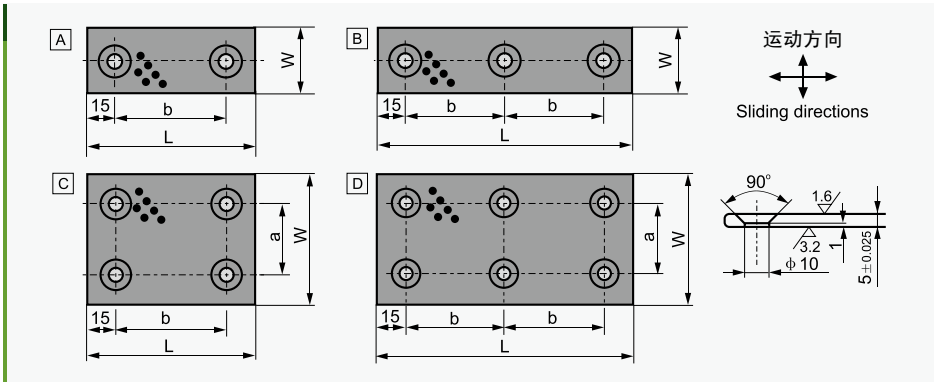

W	L	a	b	图示 Sketch	型号 Part No
18	50	-	20	A	**EB65.09-18×50**
	75		45		**EB65.09-18×75**
	100		70		**EB65.09-18×100**
	150		60	B	**EB65.09-18×150**
28	50	-	20	A	**EB65.09-28×50**
	75		45		**EB65.09-28×75**
	100		70		**EB65.09-28×100**
	150		60	B	**EB65.09-28×150**
38	50	-	20	A	**EB65.09-38×50**
	75		45		**EB65.09-38×75**
	100		70		**EB65.09-38×100**
	150		60	B	**EB65.09-38×150**
48	75	-	45	A	**EB65.09-48×75**
	100		70		**EB65.09-48×100**
	125		95		**EB65.09-48×125**
	150		60	B	**EB65.09-48×150**
75	75	45	45	C	**EB65.09-75×75**
	100		70		**EB65.09-75×100**
	125		95		**EB65.09-75×125**
	150		60	D	**EB65.09-75×150**
100	100	70	70	C	**EB65.09-100×100**
	125		95		**EB65.09-100×125**
	150		60	D	**EB65.09-100×150**

3.10 EB65.10 自润滑板
EB65.10 Wear Strips

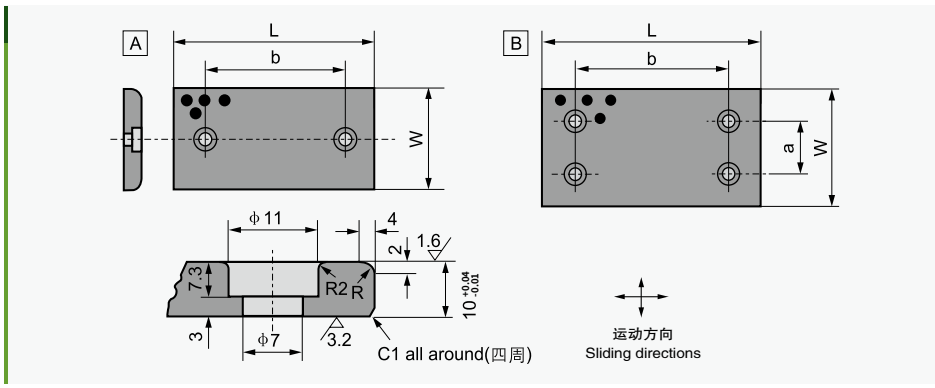

W	L	a	b	图示 Sketch	型号 Part No
28	75	-	45	A	**EB65.10-28×75**
	100		50		**EB65.10-28×100**
	125		75		**EB65.10-28×125**
	150		100		**EB65.10-28×150**
38	75	-	45		**EB65.10-38×75**
	100		50		**EB65.10-38×100**
	125		75		**EB65.10-38×125**
	150		100		**EB65.10-38×150**
48	75	-	45		**EB65.10-48×75**
	100		50		**EB65.10-48×100**
	125		75		**EB65.10-48×125**
	150		100		**EB65.10-48×150**
	200		150		**EB65.10-48×200**

3.11 EB65.11 自润滑板
EB65.11 Wear Plates (VDI 3357)

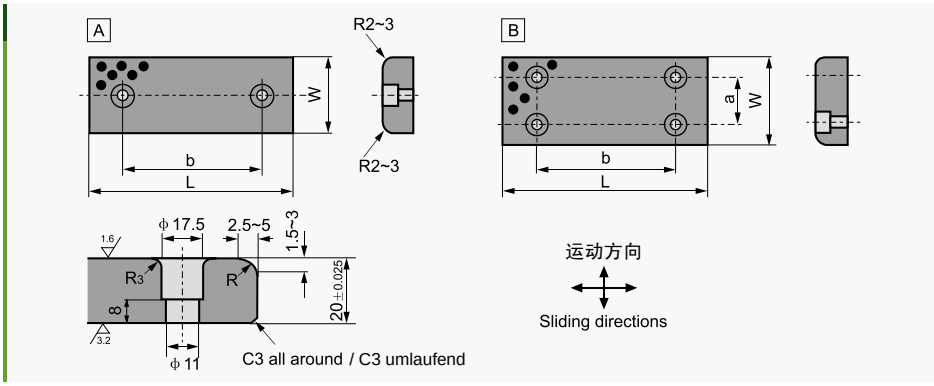

W	L	a	b	图示 Sketch	型号 Part No
28	75	-	45	A	**EB65.11-28×75**
	100		50		**EB65.11-28×100**
	150		100		**EB65.11-28×150**
38	75	-	45		**EB65.11-38×75**
	100		50		**EB65.11-38×100**
	150		100		**EB65.11-38×150**
48	75	-	45		**EB65.11-48×75**
	100		50		**EB65.11-48×100**
	125		75		**EB65.11-48×125**
	150		100		**EB65.11-48×150**
	200		150		**EB65.11-48×200**
58	75	-	45		**EB65.11-58×75**
	100		50		**EB65.11-58×100**
	150		100		**EB65.11-58×150**
75	75	-	25		**EB65.11-75×75**
	100		50		**EB65.11-75×100**
	125		75		**EB65.11-75×125**
	150		100		**EB65.11-75×150**
	200		150		**EB65.11-75×200**

W	L	a	b	图示 Sketch	型号 Part No
100	100	50	50	B	**EB65.11-100×100**
	125		75		**EB65.11-100×125**
	150		100		**EB65.11-100×150**
	200		150		**EB65.11-100×200**
	250		200		**EB65.11-100×250**
	300		200		**EB65.11-100×300**
125	125	50	75		**EB65.11-125×125**
	150		100		**EB65.11-125×150**
	200		150		**EB65.11-125×200**
	250		200		**EB65.11-125×250**
	300		200		**EB65.11-125×300**
	350		200		**EB65.11-125×350**
150	150	100	100		**EB65.11-150×150**
	200		150		**EB65.11-150×200**
	250		200		**EB65.11-150×250**

3.12 EB65.12 水利工程滑板
EB65.12 Bi-metal Wear Plates

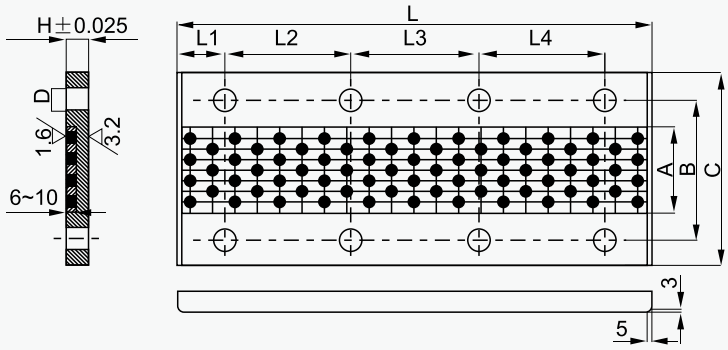

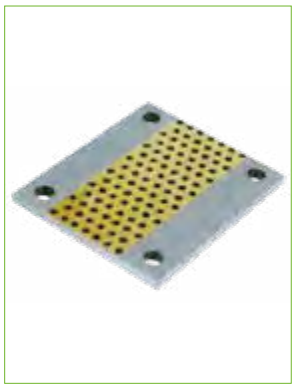

L	A	B	C	H	L_1	L_2	L_3	L_4	D	螺栓 Bolt	型号 Part No
500	90	145	200	20	46	136	136	136	24	M22	**EB65.12-H500×200**
450	80	130	180	20	42	122	122	122	22	M20	**EB65.12-H450×180**
400	70	115	160	18	35	110	110	110	20	M16	**EB65.12-H400×160**
300	60	100	140	16	30	120	120		16	M14	**EB65.12-H300×140**

3.13 EB65.13 凸轮行程滑板
EB65.13 Cam Dwell Wear Plates

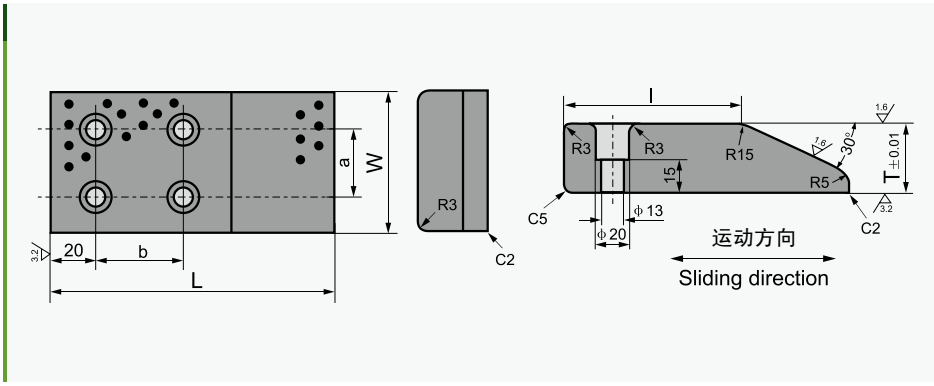

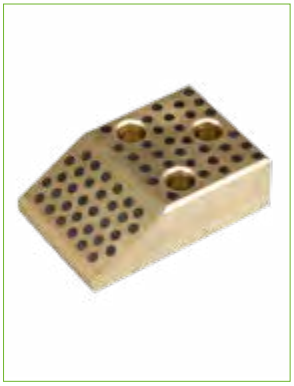

W	L	T	l	a	b	型号 Part No
75	130	30	95	40	50	**EB65.13-75×130**
	150	45	90		45	**EB65.13-75×150**
	170	60				**EB65.13-75×170**
	200		120		75	**EB65.13-75×200**
100	130	30	95	60	50	**EB65.13-100×130**
	150	45	90		45	**EB65.13-100×150**
	170	60				**EB65.13-100×170**
	200		120		75	**EB65.13-100×200**
125	130	30	95	85	50	**EB65.13-125×130**
	150	45	90		45	**EB65.13-125×150**
	170	60				**EB65.13-125×170**
	200		120		75	**EB65.13-125×200**
150	130	30	95	110	50	**EB65.13-150×130**
	150	45	90		45	**EB65.13-150×150**
	170	60				**EB65.13-150×170**
	200		120		75	**EB65.13-150×200**

3.14 EB65.14 L型自润滑板
EB65.14 L-Gibs

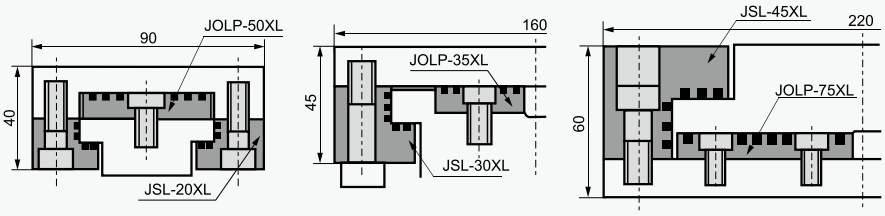

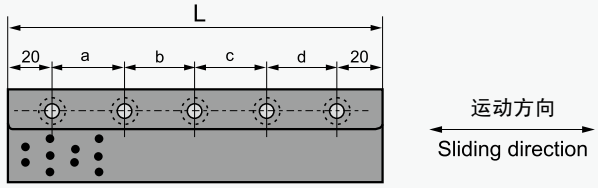

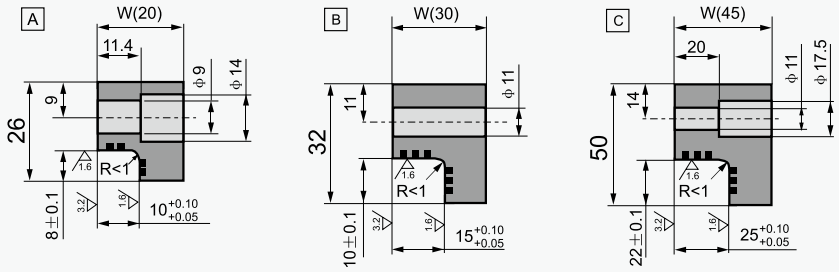

W	L	螺栓位置 Bolt location				螺栓 Bolt		图示 Sketch	型号 Part No
		a	b	c	d	Type 规格	Q'ty 数量		
20	100	60	-	-	-	M8	2	A	**EB65.14-E-20×100**
	150	55	55	-	-		3		**EB65.14-E-20×150**
	200	55	50	55	-		4		**EB65.14-E-20×200**
30	100	60	-	-	-	M10	2	B	**EB65.14-E-30×100**
	150	55	55	-	-		3		**EB65.14-E-30×150**
	200	55	50	55	-		4		**EB65.14-E-30×200**
	250	70	70	70	-		4		**EB65.14-E-30×250**
45	200	55	50	55	-		4	C	**EB65.14-E-45×200**
	250	70	70	70	-		4		**EB65.14-E-45×250**
	300	65	65	65	65		5		**EB65.14-E-45×300**
	350	80	75	75	80		5		**EB65.14-E-45×350**

3.15 EB65.15 凸轮底部导板
EB65.15 Guide Components U & V Blocks

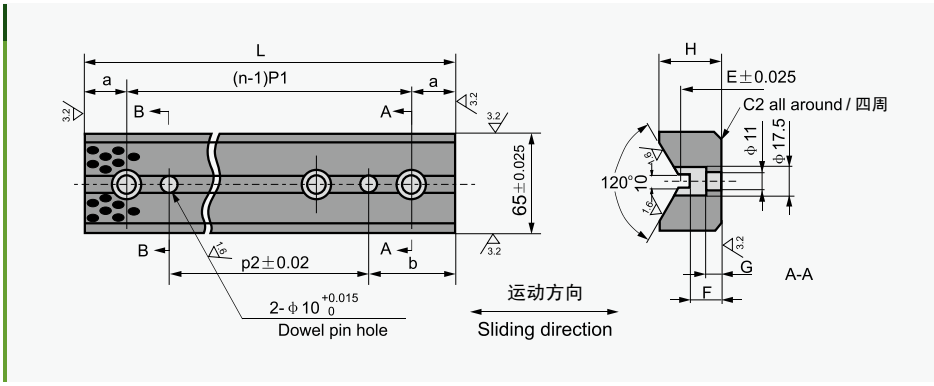

L	H	E	F	G	a	P1	螺栓 Bolt n	b	p2	型号 Part No
100	35	18	15	8	20	60	2	40	20	**EB65.15-C-100**
150					25	50	3	50	50	**EB65.15-C-150**
200							4		100	**EB65.15-C-200**
250							5		150	**EB65.15-C-250**
300							6		200	**EB65.15-C-300**

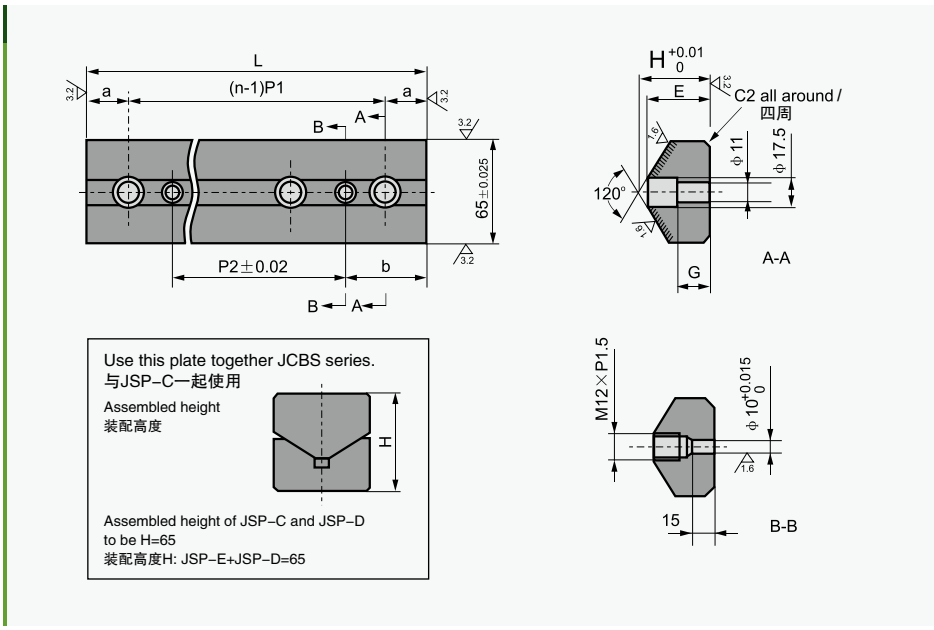

L	H	E	G	a	P_1	螺栓 Bolt n	b	p_2	型号 Part No
100	47	44	20	20	60	2	40	20	**EB65.15-D-100**
150				25	50	3	50	50	**EB65.15-D-150**
200						4		100	**EB65.15-D-200**
250						5		150	**EB65.15-D-250**
300						6		200	**EB65.15-D-300**

3.16 EB65.16 模架
EB65.16 Inclined Ejector Units, maintenance-free

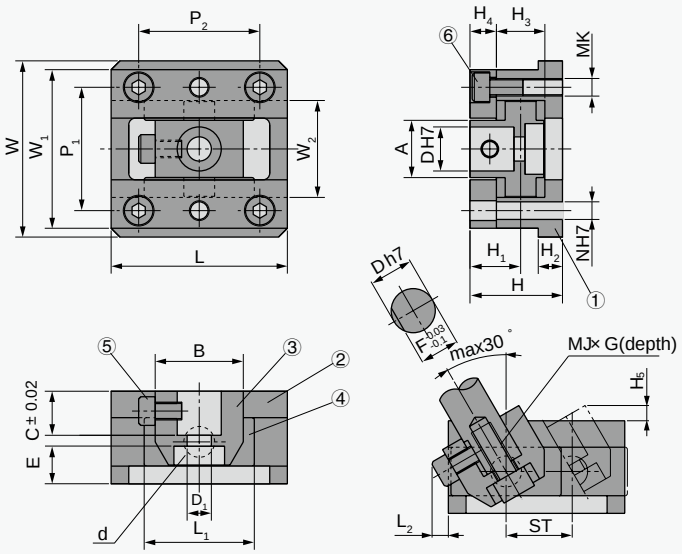

Tolerance not specified : DIN ISO 2768 - middle

D	d	D_1	A	B	C	E	F	MJ	G	H	H_1	H_2	型号 Part No
8	7	4.5	11	20	8	10	7	M4	8	22	12.5	5	**EB65.16-8**
10	7	5.5	15	25	10	12.5	9	M5	9	27	15.5	5	**EB65.16-10**
12	10	7	17	25	12	15	11	M6	10	32	18	7	**EB65.16-12**
16	12	9	22	30	16	15	14.5	M8	12	36	20	8	**EB65.16-16**
20	14	11	26	40	20	16	18	M10	16	42	23	11	**EB65.16-20**
25	16	14	32	45	25	17	22.5	M12	20	50	28	15	**EB65.16-25**
30	18	14	38	50	30	17	27	M12	25	55	30	15	**EB65.16-30**
35	20	14	45	60	35	18	32	M12	30	62	35	15	**EB65.16-35**
40	25	18	55	70	40	19	36	M16	35	70	40	15	**EB65.16-40**
45	30	18	60	80	45	24	40	M16	40	80	45	15	**EB65.16-45**

H_3	H_4	H_5	L	L_1	L_2	W	W_1	W_2	P_1	P_2	MK	N	ST	型号 Part No
11	7	10.5	32	20	3.6	33	30	19	24	20	M3	3	10	**EB65.16-8**
15	8	11.3	45	25	4.5	45	40	25	32	30	M4	4	18	**EB65.16-10**
16	10	4	50	30	5	57	51	31	39	35	M6	6	20	**EB65.16-12**
20	10	5	65	40	5	65	58	38	46	40	M6	6	25	**EB65.16-16**
22	12	8	80	50	5	80	72	44	56	55	M8	8	30	**EB65.16-20**
26	15	8	90	55	6	93	85	52	66	65	M10	10	35	**EB65.16-25**
30	15	9	100	60	7	101	93	60	74	70	M10	10	40	**EB65.16-30**
34	18	10	120	75	8	120	110	70	85	80	M12	10	45	**EB65.16-35**
44	18	12	135	85	8	130	120	80	95	90	M12	10	50	**EB65.16-40**
50	20	14	150	95	10	140	130	90	105	110	M12	10	55	**EB65.16-45**

3.15 Guide Bushings And Clamps

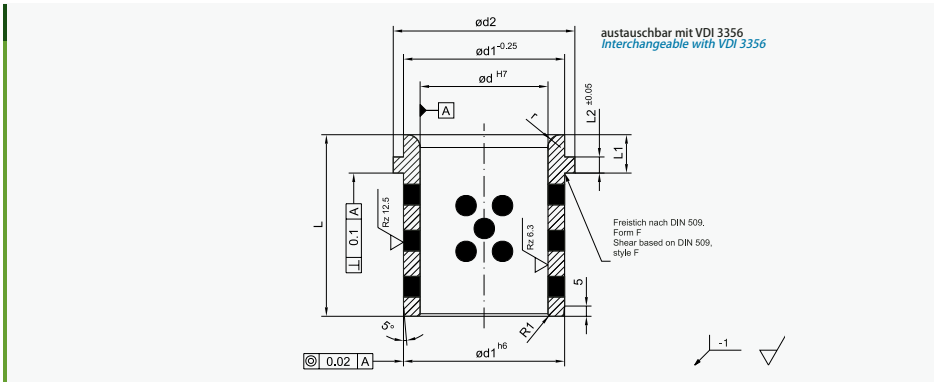

WF750/1A Ident-Nr. Code-No	Φd	L	$Φd_1$	$Φd_2$	L_1	L_2	r	zugehorige Klammer Ident-Nr. accompanying clamp Code-No
18 299	23	40	32	40	6	3	5	**19780**
18 300	25							
18 301	32	50	40	50	10	5		**19781**
18 302	40	63	50	63	13	8	6	**19782**
18 303	42							
18 304	50	72	63	75	14			
18 305	52							
18 306	63	80	80	95	17	10	8	**19783**
18 307	65				16			
18 308	80	100	100	120	20			
18 309	82							
18 310	100	125	125	150	25	16	10	**19794**
18 311	125	160	160	190	30		13	

Maße ohne Toleranzangabe DIN 7168 mittel/Measurements without a tolerance specification – DIN 7168 medium

Klammer ident-Nr. Clamp Code-No.	Buchsen-Innen-Φ Bushing-inside-Φ	b	l -0,4	L_1	h h_{11}	h_1 -0,1	h_2 +0,4	b_1	b_2	$Φd_1$	$Φd_2$	Schrauben	Form style
19 780	25	20	16	-	6	3	3,2	12	4	6.6	13	1*M6	**A**
19 781	32		20		10	5	6,8	12,5	5		11		**B**
19 782	40-50	25	40	20	14	8	9	16	7	9	15	2*M8	
19 783	63-80	32	50	25	16	10	11	20,5	9	11.5	18	2*M10	
19 784	100-125	40	60	30	25	16	13	27	14	13.5	20	2*M12	

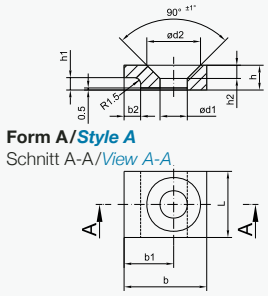

Form A/*Style A*
Schnitt A-A/*View A-A*

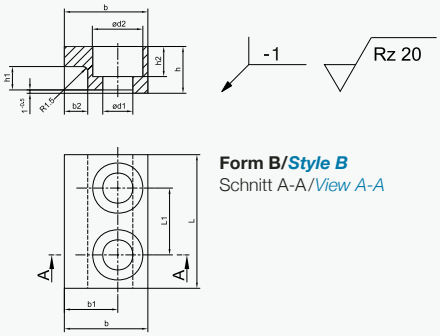

Form B/*Style B*
Schnitt A-A/*View A-A*

3.15 EB65.06
EB65.06 Guide Bushings With Flange

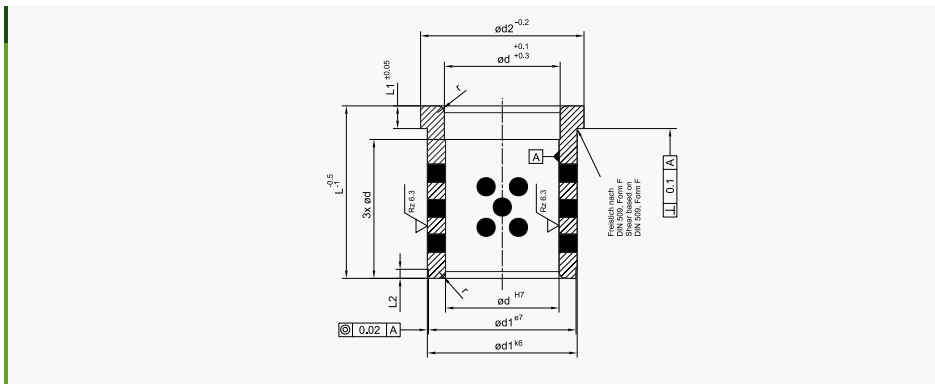

Φd	9	10	12	14	15	16	18	20	22	24	30	32	40	42	50	60
$Φd_1$	14	14	18	20	20	22	26	26	30	30	42	42	54	54	66	**80**
$Φd_2$	16	16	23	25	25	27	31	31	35	35	47	47	60	60	72	**86**
L1	3	3	6	6	6	6	6	6	6	6	6	6	10	10	10	**20**
L2	2	2	3	3	3	3	3	3	3	3	3	3	4	4	4	**4**
r	1	1	1,5	1,5	1,5	1,5	1,5	1,5	2	2	2	2	3	3	3	**3**

L	EB65.06 ident-Nr. Code -No															
12	17830	17900														
17	17831	17901	17902	17903	17907	17911	17915	17920	17926	17932						
22	17832	17835	17838	17904	17908	17912	17916	17921	17927	17933						
27	17833	17836	17839	17905	17909	17913	17917	17922	17928	17934	17939	17945				
36	17834	17837	17840	17906	17910	17914	17918	17923	17929	17935	17940	17946				
46				17841	17843	17845	17919	17924	17930	17936	17941	17947				
56				17842	17844	17846	17847	17925	17931	17937	17942	17948	17951	17955		
66							17848	17849	17850	17938	17855	17858	17861	17865		
76									17851	17853	17943	17949	17952	17956	17959	
86									17852	17854	17856	17859	17862	17866	17869	
96											17944	17950	17953	17957	17960	**17963**
116											17857	17860	17954	17958	17961	**17964**
136													17863	17867	17962	**17965**
156													17864	17868	17870	**17872**
196															17871	**17873**

Maße ohne Toleranzangabe DIN 7168 mittel/Measurements without a tolerance specification – DIN 7168 medium
Bei Bestellungen Bezeichnung und Ident-Nr. angeben / In case of order please mention the discription and Code No.

3.15 Wear Plates

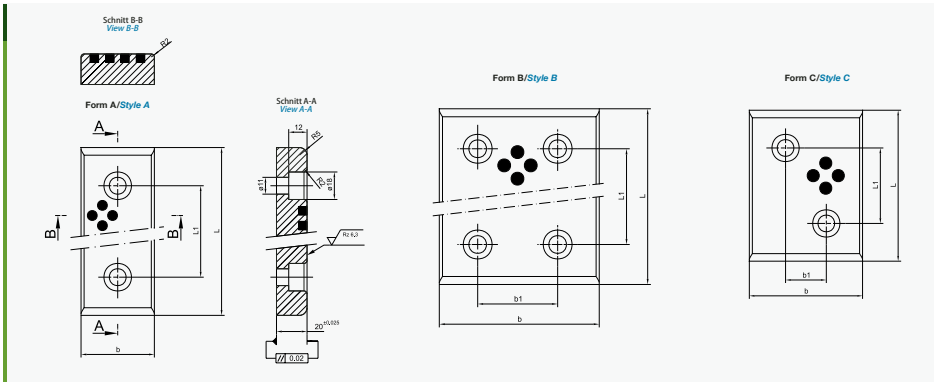

wf750/1A ident-Nr. code-No.	wf 750/5A ident-Nr. Code-No	b×L	b1	L1	Form style
17 180	18840	28×75		45	
17 181	18841	28×100		50	
17 184	18991	28×25		75	
17 182	18842	28×150		100	
17 183	14668	38×75		45	
18 930	18980	38×100		50	
13 269	18843	38×125		75	
18 931	18981	38×150		100	
17 185	14941	38×200		150	
17 150	18844	48×75	-	45	A
17 151	18845	48×100		50	
17 152	18846	48×125		75	
17 153	18847	48×150		100	
14 371	18848	48×200		150	
17 189	18849	58×75		45	
17 190	14786	58×100		50	
17 191	14787	58×150		100	
17 155	14784	75×75		25	
18 932	18982	75×100	25	50	C
17 157	15089	75×100		50	
17 156	18850	75×125	-	75	A
18 933	18983	75×150		100	
17 158	18851	75×200		150	
18 934	18984	100*100		50	
17 160	14899	100*125		75	
18 935	18985	100*150		100	
17 162	14788	100*200		150	
17 163	18852	100*250		200	
14 799	18853	100*300		200	
15 291	18854	125*125	50	75	
17 164	18855	125*150		100	
17 165	15906	125*200		150	
17 166	18856	125*250		200	B
14 805	18857	125*300		250	
17 159	18858	125*350		200	
17 167	13769	150*150		100	
17 168	18859	150*200	100	150	
17 169	18860	150*250		200	
17 192	18992	150*300		250	
17 193	14309	200*200		150	
17 194	18993	200*250	150	200	
17 195	18994	200*300		250	

3.15 Wear Plates

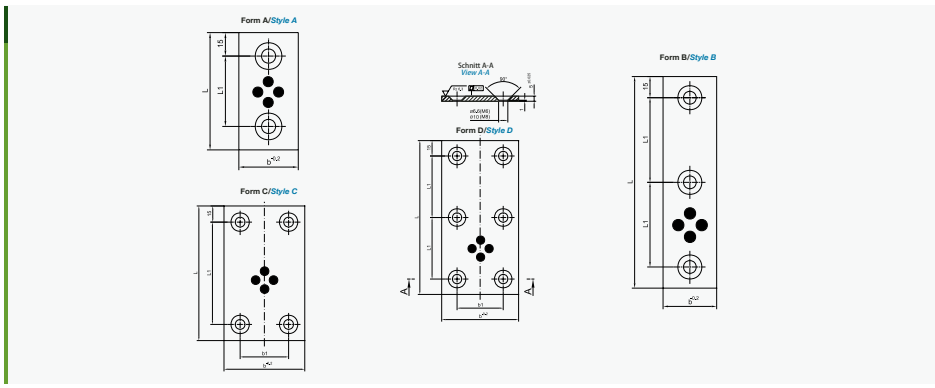

WF750/1A ident-Nr. code-No	b×l	b1 +-0,1	l1 +-0,1	Form style	schrauben screws
18 540	18×50	-	20	A	M6
18 541	18×75		45		
18 542	18×100		70		
18 543	18×150		60	B	
18 544	28×50	-	20	A	M8
18 545	28×75		45		
18 546	28×100		70		
18 547	28×150		60	B	
18 548	38×50	-	20	A	M8
18 549	38×75		45		
18 550	38×100		70		
18 551	38×150		60	B	
18 552	48×75	-	45	A	M8
18 553	48×100		70		
18 554	48×125		95		
18 555	48×150		60	B	
18 556	75×75	45	45	C	M8
18 557	75×100		70		
18 558	75×125		95		
18 559	75×150		60	D	
18 560	100×100	70	70	C	M8
18 561	100×125		95		
18 562	100×150		60	D	

Maße ohne Toleranzangabe DIN 7168 mittel
Measurements without a tolerance specification – DIN 7168 medium

3.15 Wear Plates

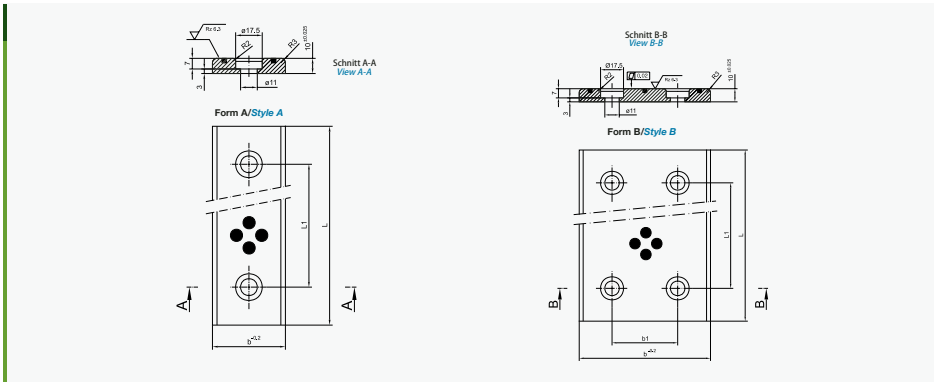

WF750/1A ident-Nr. Code-Nr.	b×l	b1 +-0,1	L1 +-0,1	Form style
15 493	28×75	-	45	A
13 606	28×100		50	
15 274	28×125		75	
14 781	28×150		100	
14 369	38×75	-	45	A
14 368	38×100		50	
18 867	38×125		75	
18 861	38×150		100	
14 795	48×75	-	45	A
14 796	48×100		50	
13 344	48×125		75	
13 021	48×150		100	
13 229	48×200		150	
13 228	75×75	-	45	A
14 800	75×100		50	
15 313	75×125		75	
13 020	75×150		100	
13 141	75×200		150	
13 337	100×100	50	50	B
13 345	100×125		75	
15 190	100×150		100	
13 031	100×200		150	
18 862	100×250		200	
15 312	125×150	50	100	B
18 863	125×200		150	
18 864	125×250		200	
13 035	150×150	100	100	B
18 865	150×200		150	
18 866	150×250		200	

Maße ohne Toleranzangabe DIN 7168 mittel
Measurements without a tolerance specification – DIN 7168 medium

3.15 Wear Plates

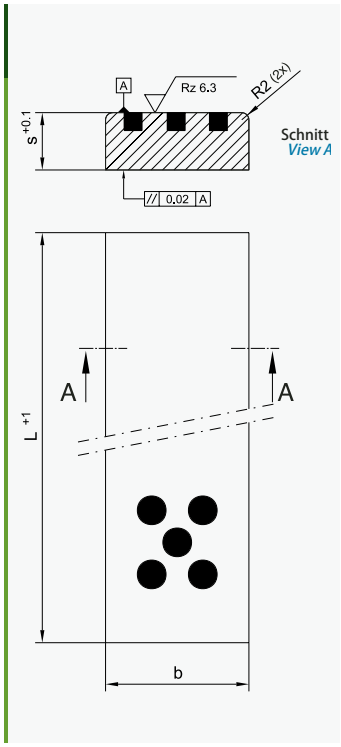

Es ist jeder Zuschnitt bis 1,005 mm Länge lieferbar.
Any length up to 1.005 mm is available

Maße ohne Toleranzangabe DIN 7168 mittel
Measurements without a tolerance specification – DIN 7168 medium

WF750/1A ident-Nr./Code-No	b×s	L
19 700	20×4	**305**
17 634	20×10	**605**
19 701	25×5	**305**
17 266		**500**
17 620		**605**
17 814		**1005**
17 267	30×6	**500**
17 621		**605**
17 810		**1005**
17 600	30×8	**500**
17 622		**605**
17 811		**1005**
17 604	35×10	**500**
17 623		**605**
15 379		**1005**
17 268	40×8	**500**
17 624		**605**
17 800		**1005**
17 601	40×10	**500**
17 625		**605**
17 801		**1005**
17 269	40×12	**500**
17 626		**605**
17 802		**1005**
17 270	40×16	**500**
17 813		**605**
17 610		**1005**
17 612	50×8	**1005**
17 602	50×10	**500**
17 627		**605**
17 803		**1005**
17 603	50×12	**500**
17 628		**605**
17 804		**1005**
17 823	50×20	**1005**
13 226	60×8	**605**
17 608		**1005**
15 839	60×10	**605**
17 822		**1005**
17 629	60×12	**605**
17 805		**1005**
17 605	60×16	**500**
17 630		**605**
17 806		**1005**
17 633	60×20	**500**
17 812		**1005**
13 232	75×12	**605**
13 238		**1005**
13 977	80×12	**500**
14 678		**605**
17 820		**1005**
17 606	80×16	**500**
17 631		**605**
17 807		**1005**
17 607	80×20	**500**
17 632		**605**
17 808		**1005**
14 197	100×10	**500**
17 611		**1005**
17 609	100×12	**1005**
14 737	100×20	**500**
17 821		**1005**
17 824	125×20	**1005**
17 825	160×20	**1005**

3.15 Multiple Area Guiding Stripes With 2 Slide Areas

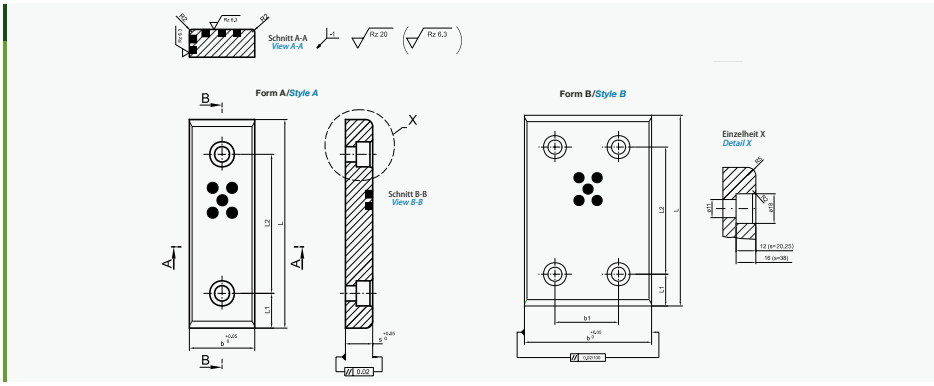

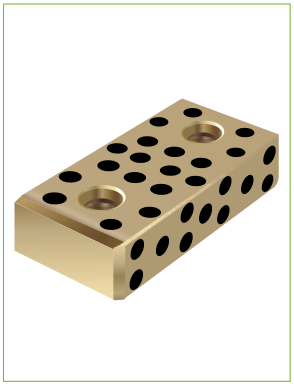

WF750/1A S=20 ident-Nr code-No	WF750/1A S=25 ident-Nr code-No	b×L	b1	L1	L2	Form style
17 550	17 570	28×75	-	15	45	A
17 551	17 571	28×100		25	50	
17 552	17 572	28×150			100	
17 553	17 573	38×75		15	45	
17 554	17 574	38×100		25	50	
17 555	17 575	38×125			75	
17 556	17 576	38×150			100	
17 557	17 577	48×75		15	45	
18 950	17 578	48×100		25	50	
17 558	17 579	48×125			75	
18 951	17 580	48×150			100	
17 559	17 581	48×200			150	
17 560	17 582	58×75		15	45	
17 561	17 583	58×100		25	50	
17 562	17 584	58×125			75	
17 563	17 585	58×150			100	
17 564	17 586	58×200			150	
17 565	17 587	75×75		15	45	
18 952	17 588	75×100		25	50	
17 566	17 589	75×125			75	
18 953	17 590	75×150			100	
17 567	17 591	75×200			150	
17 568	17 592	100×100	50		50	B
17 569	17 593	100×125			75	
17 597	17 594	100×150			100	
17 596	17 595	100×200			150	
17 598	17 599	100×250			200	

WF750/1A s=38 ident-Nr code-No	WF750/5A S=38 ident-Nr code-No	b×L	b1	L1	L2	Form style
18 936	18 986	75×100	-	25	50	A
18 937	18 987	75×150			100	

Maße ohne Toleranzangabe DIN 7168 mittel
Measurements without a tolerance specification DIN 7168 medium

BEHAM Techn. Handels GmbH

„wir sind“ Klimabündnis Betrieb

Technik, die bewegt!
www.beham.com

BEHAM

A-4910 RIED
Bahnhofstraße 67a
T: +43 / (0)7752 / 879 31-0
info@beham.com